KENWOOD

SERVICE MANUAL

Model TS-700S(SP)

This photograph shows K type.

2m ALL MODE TRANSCEIVER

CONTENTS

U.S.A.	K type
Europe	W type
Britain	T type

SPECIFICATIONS (K type)

GENERAL

Frequency Range	144.0 to 148.0 MHz
Mode	SSB (USB, LSB), CW, AM, FM
Antenna Impedance	50 Ohms
Frequency Stability	Within ±3 kHz during one hour after one minute of Warm-up, and within 150 Hz during any 30 minute period thereafter
Semiconductors	Transistors: 105, FETs: 18, ICs: 21, Diodes: 176
Power Requirement	120/220V AC, 50/60 Hz: 12.0 to 16.0V DC (nominal 13.8V DC)
Power Consumption	Transmit: 98 Watts (120/220V AC), 4.0A (13.8V DC) Receive (no signal): 48 Watts (120/220V AC), 1.2A (13.8V DC)
Dimension	278 (10-7/8) wide x 124 (4-7/8 high x 320 (12-5/8) deep mm (inch)
Weight	11.0 kg (24.2 lbs)

TRANSMITTER

RF Output Power	SSB, FM, CW: 10 Watts AM: 3 Watts FM: (Low): Approx. 1 Watts
Modulation	SSB: Balanced modulation FM: Variable reactance frequency shift AM: Low power modulation
Maximum Frequency Deviation (FM)	±5 kHz
Carrier Suppression	Better than 40 dB
Sideband Suppression	Better than 40 dB
Spurious Radiation	Better than −60 dB
Microphone	Low impedance microphone (500 Ohms)
AF Response	400 to 2,600 Hz
Repeater Frequency Shift	600 kHz
Tone Burst Duration	0.5 to 1.0 Sec.

RECEIVER

Sensitivity	SSB and CW: 0.25 μV for 10 dB (S+N)/N AM: 1.0 μV for 10 dB (S+N)/N FM: 0.4 μV for 20 dB noise quieting 1.0 μV for 30 dB (S+N)/N
Intermediate Frequency	SSB, CW and AM: 10.7 MHz FM: 1st 10.7 MHz, 2nd 455 kHz
Selectivity	SSB, CW and AM: 2.4 kHz/−6 dB, 4.8 kHz/−60 dB FM: 12 kHz/−6 dB, 24 kHz/−60 dB
Image Ratio	Better than 70 dB
IF Rejection	Better than 70 dB
Squelch Sensitivity	0.25 μV
AF Output Power	2 Watts/8 Ohms load, with less than 10% distortion
AF Output Impedance	8 Ohms

The above specifications are subject to change without notice for improvement.

BLOCK DIAGRAM(K

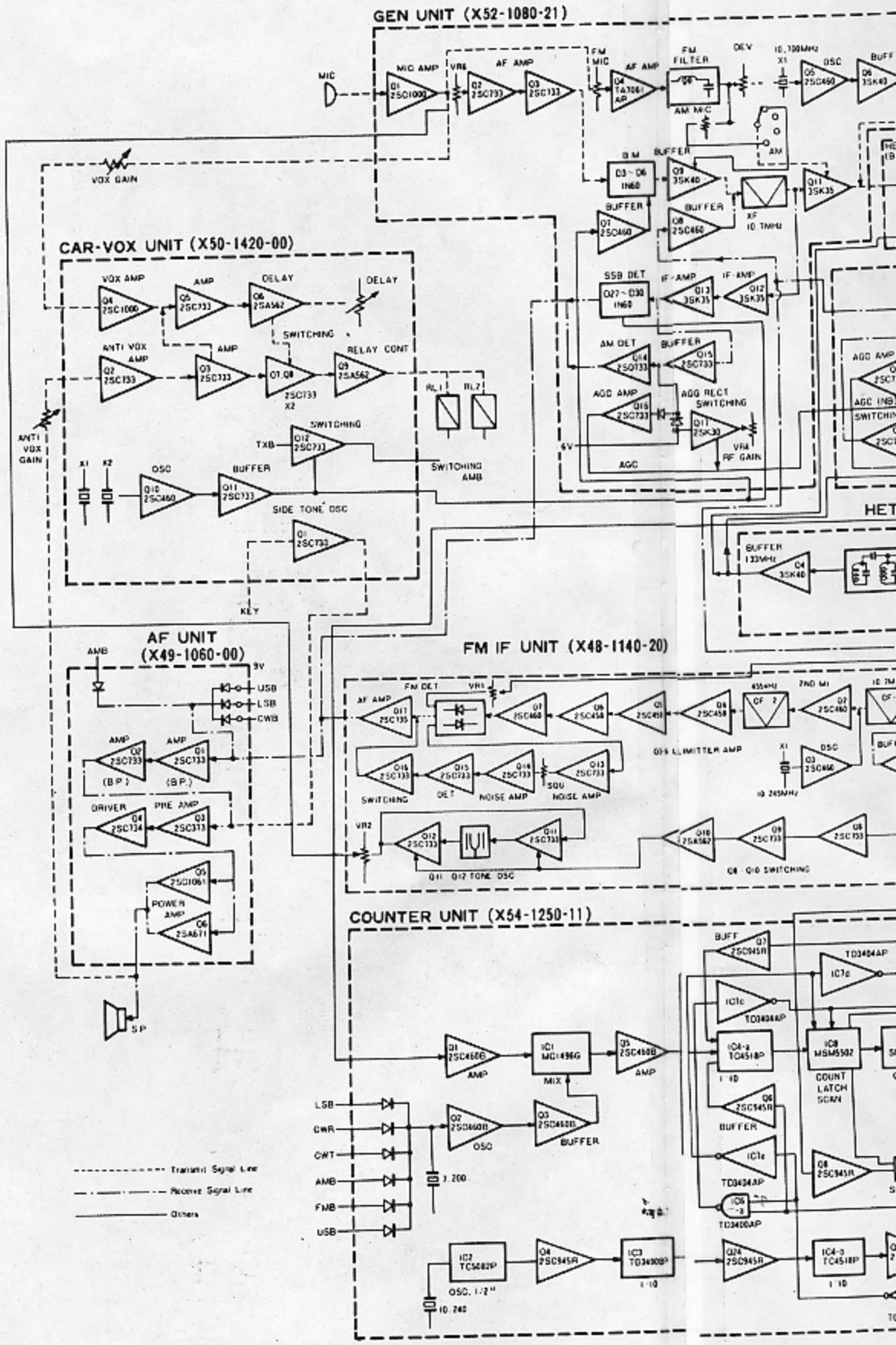

BLOCK DIAGRAM(K type)

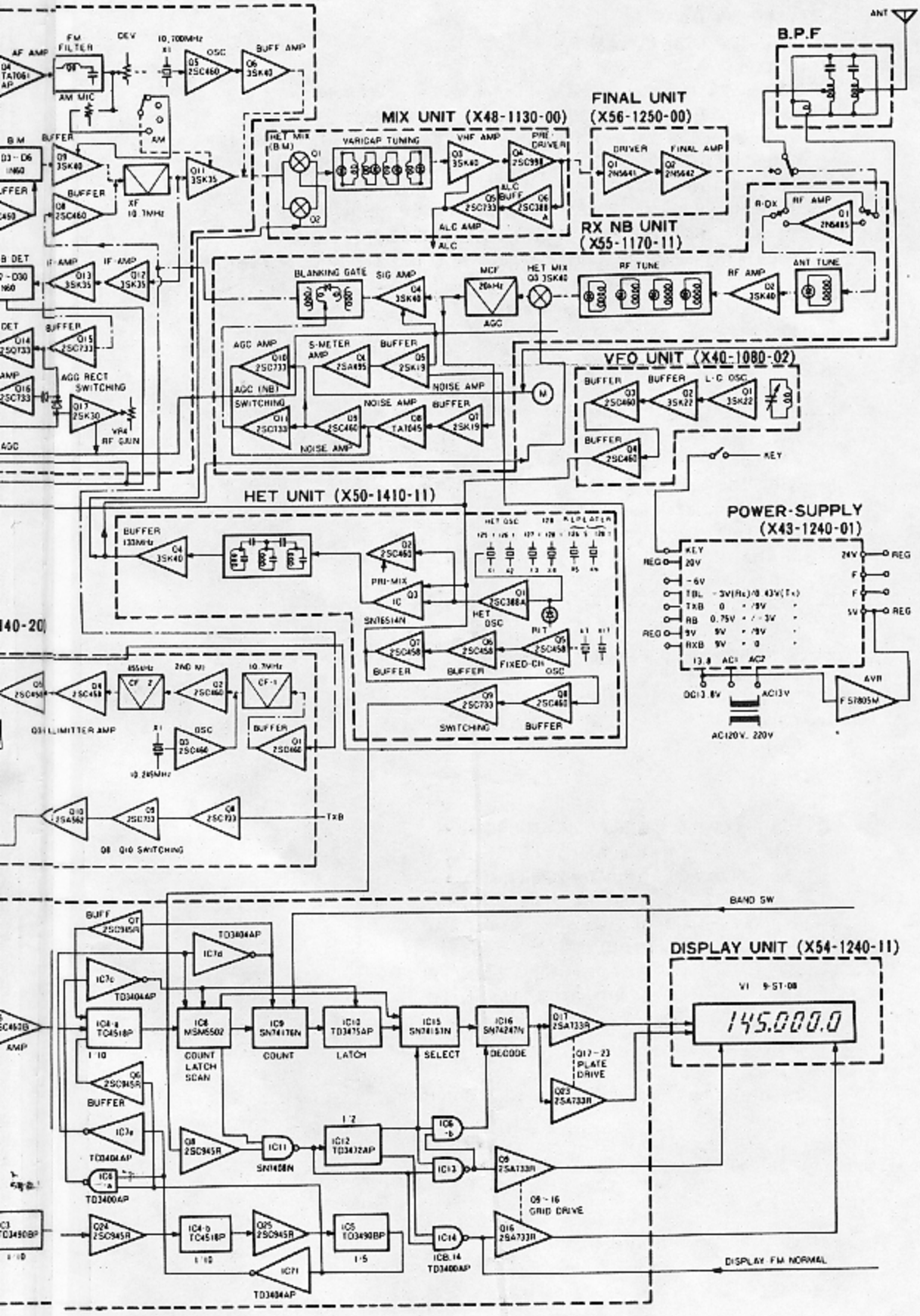

SPECIFICATIONS (W,T type)

GENERAL

Frequency Range	144.0 to 146.0 MHz
Mode	SSB (USB, LSB), CW, AM, FM
Antenna Impedance	50 Ohms
Frequency Stability	Within ±2 kHz during one hour after one minute of Warm-up and within 150 Hz during any 30 minute period thereafter.
Semiconductors	Transistors: 102 (W type), 105 (T type), FETs: 18, ICs: 21, Diodes: 162
Power Requirement	120/220V AC (W type), 220/240V AC (T type), 50/60 Hz: 12.0 to 16.0V DC (nominal 13.8V DC)
Power Consumption	Transmit: 98 Watts (120/220V AC), 4.0A (13.8V DC) (W type), 98 Watts (220/240V AC), 4.2A (13.8V DC) (T type) Receive (no signal): 48 Watts (120/220V AC), 1.2A (13.8V DC) (W type) 48 Watts (220/240V AC), 1.2A (13.8V DC) (T type)
Dimension	278 wide x 124 high x 320 deep mm
Weight	11.0 kg

TRANSMITTER

RF Output Power	SSB, FM, CW:	10 Watts
	AM:	3 Watts
	FM (Low):	Approx. 1 Watt
Modulation	SSB:	Balanced modulation
	FM:	Variable reactance frequency shift
	AM:	Low power modulation
Maximum Frequency Deviation (FM)	±5 kHz	
Carrier Suppression	Better than 40 dB	
Sideband Suppression	Better than 40 dB	
Spurious Radiation	Better than −60 dB	
Microphone	Low impedance microphone (500 Ohms)	
AF Response	400 to 2,600 Hz	
Repeater Frequency Shift	600 kHz	
RPT Tone Frequency	1,750 Hz	
Tone Burst Duration	0.5 to 1.0 Sec. (T type)	

RECEIVER

Sensitivity	SSB and CW:	0.25μV for 10 dB (S+N)/N
	AM:	1.0μV for 10 dB (S+N)/N
	FM:	0.4μV for 20 dB noise quieting 1.0μV for 30 dB (S+N)/N
Intermediate Frequency	SSB, CW and AM:	10.7 MHz
	FM:	1st 10.7 MHz, 2nd 455 kHz
Selectivity	SSB, CW and AM:	2.4 kHz/−6 dB, 4.8 kHz/−60 dB
	FM:	12 kHz/−6 dB, 24 kHz/−60 dB
Image Ratio	Better than 70 dB	
IF Rejection	Better than 70 dB	
Squelch Sensitivity	0.25μV	
AF Output Power	2 Watts/8 Ohms load, with less than 10% distortion	
AF Output Impedance	8 Ohms	

The above specifications are subject to change without notice for improvement.

BLOCK DIAGRAM(W,T

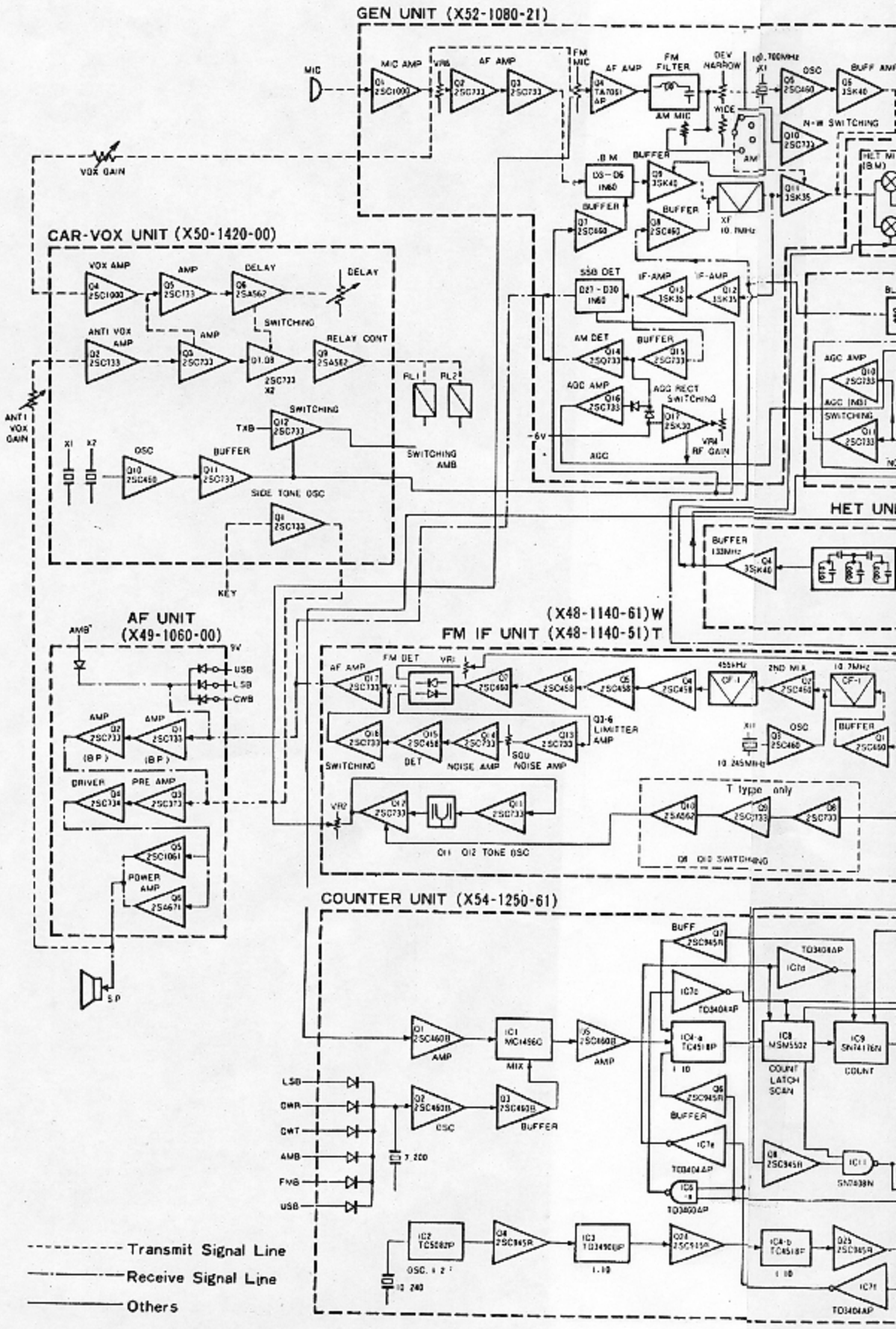

CK DIAGRAM(W,T type)

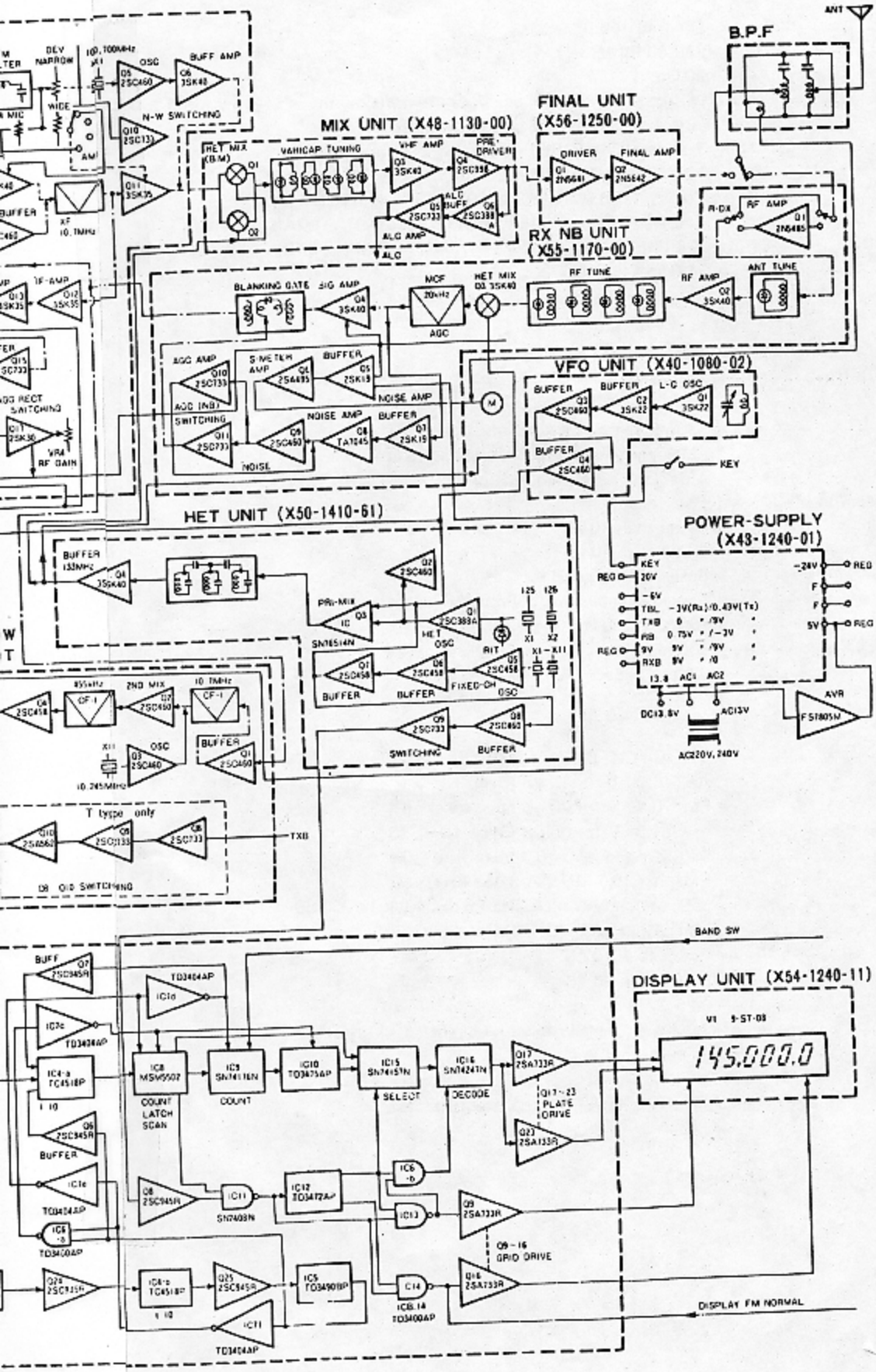

FEATURES

This transceiver is a 144 MHz through 148 MHz, all mode transceiver.

- Highly reliable VFO.
- Kenwood's stable FM circuitry
- Built-in VOX, featuring semi-brake in CW
- Built in CW side tone circuit.
- Easy to use band change system, with a single knob.
- Built in Digital Display
- Built in Receiver Pre Amp.
- Digital display features 7 digit green flourescent indicating tube.
- Carrier position can be read directly for each mode selected.
- Frequencies of fixed channels, and remote VFO is directly read.

Advanced Design Features

- The analog type sub-dial is calibrated at 100 kHz intervals for easy checking of receive frequencies.
- The two speed dial mechanism features 25 kHz per turn (inner main knob), and 100 kHz per turn (outer fast forward knob).
- The drive control is automatically switched at each band change in order to maintain optimum tuning conditions.
- The panel layout is based on human engineered technology.
- Indicating lamps are provided for VFO, RIT, and ON AIR.
- Amplification type AGC and ALC circuits are employed to maintain constant transmitting and receiving levels.

Spurious Reduction

- High selectivity circuit voltage vari-caps are used in both transmit and receive RF amplifiers.
- Latest technology double balanced IC mixer is used to assure minimums spurrious signals.
- Both the VFO and Band Pass Filter units are well shielded.

Auxiliary functions

- Kenwood's unique noise blanker circuitry eliminates pulse type noise.
- The FM squelch circuit is triggered by noise.
- There is a newly developed S-Meter which indicates S units as well as center meter and relative power output.
- Fixed channel operation is possible with the installation of 11 optional crystals.
- There is a High/Low switch for reduction of RF output.
- RIT circuit operates with VFO as well as with fixed channels.
- There is a receiver Pre Amp, which is effective for DX SSB operation.
- Split frequency operation is possible with the optional VFO-700S Remote VFO.

Designed for fixed and mobile operation

- The TS-700S features both AC and DC built in supplys.
- Accessories include high performance hand type microphonne.
- There is a convenient carrying handle.
- High level audio output (2 Watts into 8 Ohms) permits operation in noisey mobile locations.
- Built in speaker (9 CM by 6 CM). There is a jack for external speaker connection.

GENERAL/CIRCUIT DESCRIPTION

This unit is a 2 Meter, all mode, all solid state, professional type transceiver designed to operate in the amateur bands of 144 to 148 MHz, with CW, AM, SSB and FM transmissions. The receiver section for SSB, CW and AM is of the single conversion superheterodyne type, and for FM is of the double conversion superheterodyne type.
The transmitter section is single conversion, featuring Filter type SSB, FM is variable reactance direct conversion type circuitry, and the AM section is low power modulation type. CW is of the block bias keying type.
Table 1 shows the oscillation frequency of each unit.

UNIT	MODE	FREQUENCY
HET Unit	K type	
	144	125.100 MHz
	145	126.100 MHz
	146	127.100 MHz
	147	128.100 MHz
	145.4	126.500 MHz
	147.6	128.700 MHz
	W, T type	
	144	125.100 MHz
	145	126.100 MHz
	RPT	125.500 MHz

Table 1 Oscillation Frequency of Each Unit

1. RX · NB Unit (X55-1170-11) K type (X55-1170-00) W, T type

The RF circuit has a 4-stage tuning circuit with varii-cap diodes. By adjusting the drive knob, the vari-cap voltage is controlled for optimum tuning. This largely improves the reception of spurious signals.
The RF amplifier is operated by setting the R. DX switch to ON. The amplifier uses a low noise FET to provide about 5dB gain. Normally, the R. DX switch is set to OFF. When receiving signals adjacent to threshold level during FM operation, this switch should be set to ON. The gain control volume (VR5) is for adjustment of IF gain when R.DX switch is ON.
A semi-fixed volume is also contained in the unit for adjustment of S meter and RF meter as well as center meter.

2. FM · IF Unit (X48-1140-20) K type (X48-1140-61) W type (X48-1140-51) T type

This unit operates only in FM mode and serves to obtain the second IF signal of 455KHz, mixing the second oscillator signal of 10.245 MHz and the first IF signal of 10.7 MHz taken from RX-NB unit.

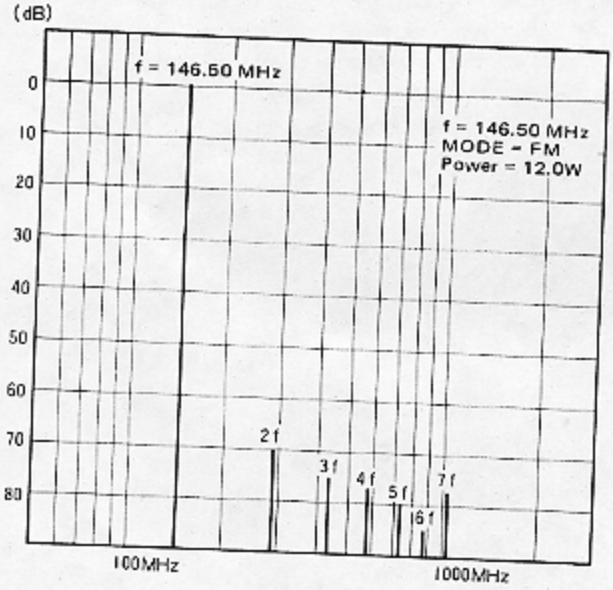

Fig. 1(a) An example of harmonics sprious

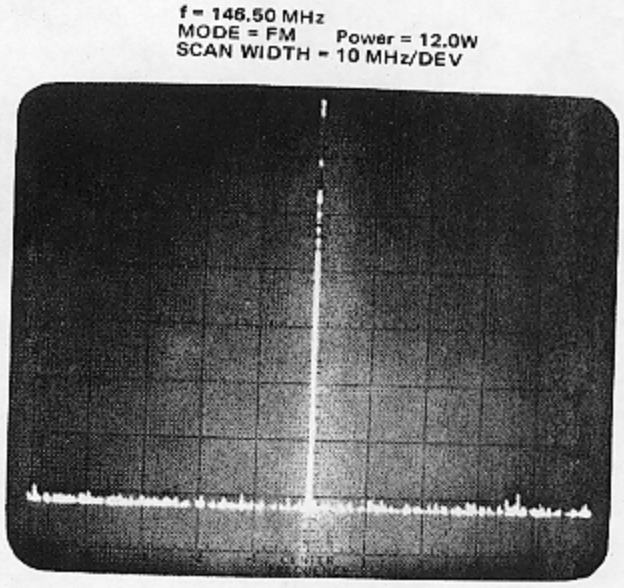

Fig. 1(b) An example of adjacent sprious

CIRCUIT DESCRIPTION

3. HET Unit (X50-1410-11) K type (X50-1410-61) W, T type

A 3-stage tuning circuit is provided after the MIX stage to suppress spurious of heterodyne signal in 133MHz band. External VFO (VFO-700S) is available as an optional accessory for use with the unit. With VFO-700S connected to the unit, the RIT circuit is automatically switched OFF by the relay in the unit, when the function switch is set to the external VFO position. Thus, the internal RIT circuit does not operate while the RIT in external VFO is in operation.

4. CAR · VOX Unit (X50-1420-00)

This unit is composed of a carrier oscillator circuit, a VOX circuit and a side-tone oscillator circuit. Semi-break-in operation in CW mode is possible by using side-tone signal.

5. BPF Unit (L79-0432-15) K type (L79-0430-15) W, T type

Double tuning configulation is employed. This results in eliminating the FINAL knob and contributes to improve handling.

6. Power Supply Unit (X43-1240-01)

The power supply unit contains a DC-DC converter to supply power to the fluorescent display tubes. It delivers outputs of AC 3.5V and DC-24V with 5V input. Oscillation frequency of DC-DC converter is 11KHz.

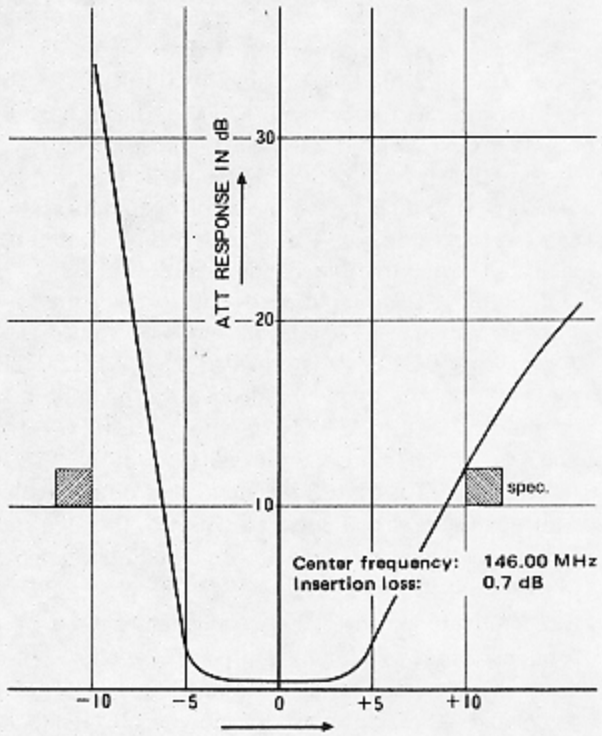

Fig. 2(a) An example of BPF characteristic (K type)

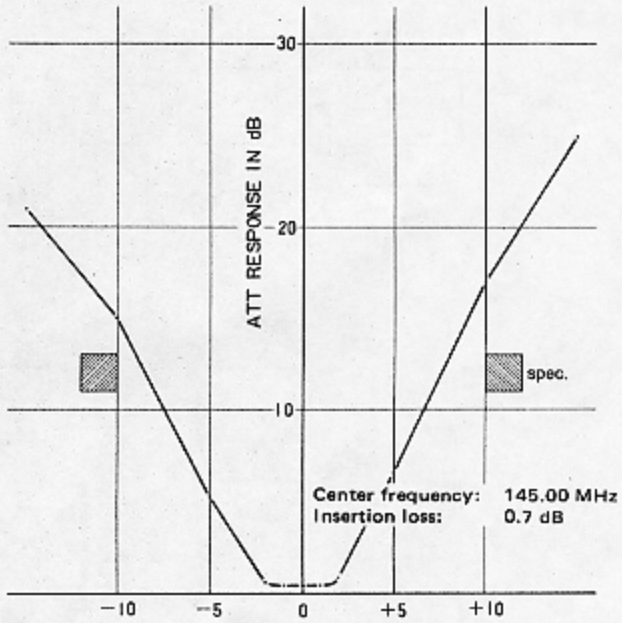

Fig. 2(b) An example of BPF characteristic (W, T type)

CIRCUIT DESCRIPTION

7. Counter Unit (X54-1250-11) K type (X54-1250-61) W, T type

Fig. 3 shows a block diagram of the counter unit. Signal from VFO (8.2–9.2MHz) is amplified by Q1 and is fed to IC1 where the frequency of 7.2MHz band provided by Q2.X2 is mixed with it to obtain 1–2MHz signal.

In the 7.2MHz local oscillator, the oscillation frequency is switched according to the mode of operation so that the carrier frequency of the corresponding mode can be indicated during transmission or reception.

Output of IC1 is amplified by Q5 through the low pass filter consisting of L12 and C33, and is fed to IC4-1.

A signal of 10.240MHz is provided by IC2 (TC5082P) and the gate signal is frequency divided by the built-in binary counter to $1/2^{12}$ (= 1/4096) to obtain 2.5KHz output. This signal is further frequency divided (1/5) by IC3, (1/10) by IC4-b and (1/10) by IC5 to obtain 5Hz output with pulse width of 100msec and duty ratio of 50%. Q4, Q24 and Q25 function as a level converter to combine IC operating on 7V or 9V and IC operating on 5V. The gate signal passes through the level converter Q6 and is fed to IC4-a.

A latch pulse is generated by IC6-a, IC7-c and IC7-f in the delay circuit composed of R64 and C30 when the count is completed. The output of the counter IC (IC9) at "H" appears as outputof the latch IC(IC10). The output at "L" remains unchanged even when the input of the latch IC is changed. IC8 functions in the same way.

A reset pulse is generated by IC7-d and IC7-e in the differential circuit composed of R28, 29 and C31 just before the count is started. Q7 is a level converter. The direciton of logical level is the same for reset inputs of IC4-a and IC8.

These IC's are reset at "H" and the output of BCD becomes "L" L" L" L" regardless of presence or absence of CLOCK input. When the reset input terminal is "L", the count is started. The condition of generation of the latch pulse and reset pulse is shown in the time chart (A) of **Fig. 4.**

The 1–2Mhz signl is amplified by A5 and is divided by 1/10 (IC4-a) and is further divided by $1/10^4$ (IC8) so that a 10–20Hz signal is fed to IC9. Since the gate time is 100msec, when the input of IC4-a is less than 1MHz, no inputpulse is fed to CK1 of IC9; when it is more than 1MHz and less than 2MHz, 1 input pulse is fed; and when it is more than 2MHz, 2 input pulses are fed.

When the DS terminal of IC9 is "L", a preset input appears in QA-QD as an output. When DS is "H", the count is started from the value reset. Since the number of the input pulse to CK1 of IC9 is "1", the value of preset input plus "1" apears in QA-QD as a counter output. By combining the input to CK1 and the preset input corresponding to the operating band, the accurate frequency is displayed according to the position of the band switch. **Table 2** shows the preset input. When the CK terminal is "H", the output of IC10 (Q1-4) varies with the input (D1-4). When the CK is shifted to "L", the output is maintained in the original state.

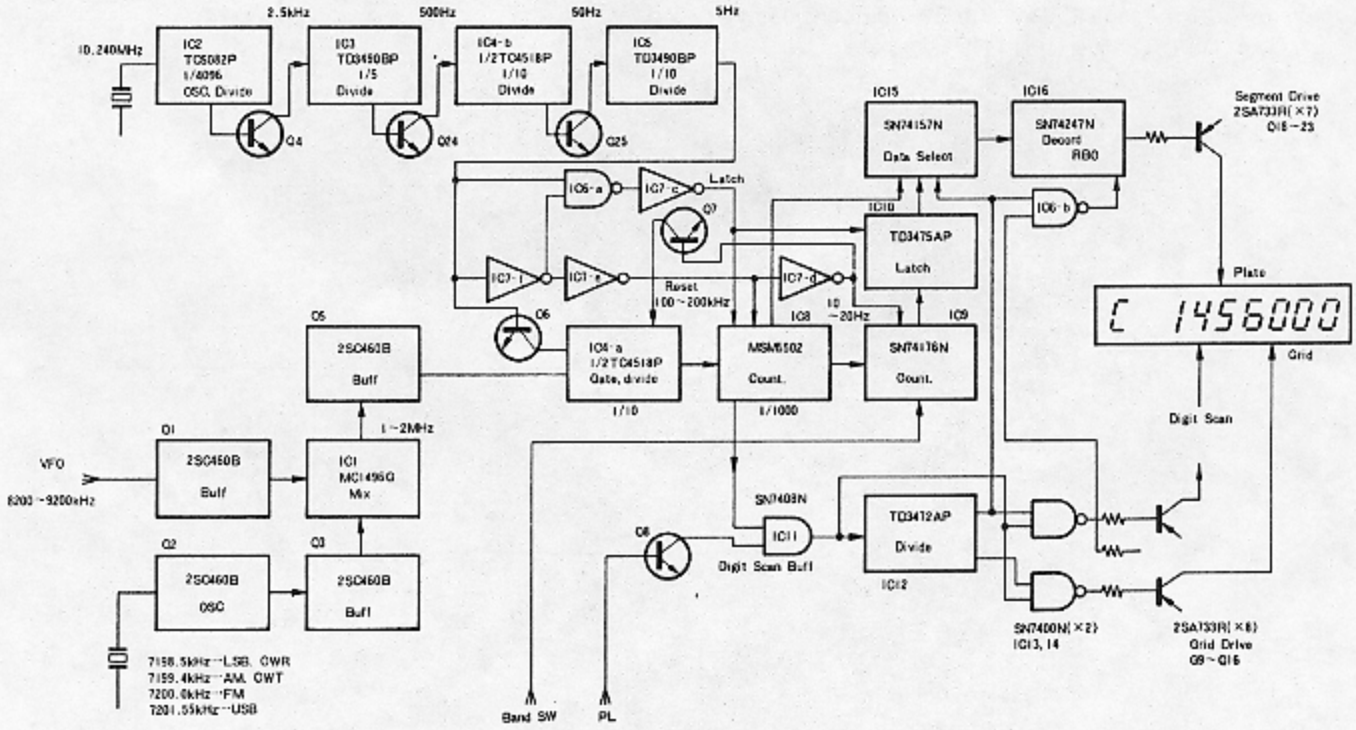

Fig. 3 Counter unit BLOCK DIAGRAM

CIRCUIT DESCRIPTION

The output of IC8 is dynamic. Since the digital scan output has 4 digits, the digital scan pulse as shown in the time chart (BO of **Fig. 5** is obtained when the output is received by IC11.

The circuit Q9-16 has a switching function. When it is ON, the display unit will light; the output of G1-7, 9 is about +4.5V. When this circuit is OFF, the display unit goes off where the output is −24V.

The fluorescent tubes in the display unit are of the dynamic lighting system. The counter unit has IC8 and IC10 to produce two different outputs. In order to operate the display tubes, the count outputs of IC8 and IC10 must be applied to the plate of display tubes according to the digit scan pulse; this is accomplished by IC15 which selects these outputs.

When SL of IC15 is "L", the A output or the input from IC8 appears on the output side. When it is "H", the B output or the input from IC10 appears on the output side. This output is BCD and is indicated on 7-segment display by means of IC16. The input from IC10 is a signal of 1MHz digit. Only when G5 is ON, it should be indicated as an output of IC16. If the output appears when G9, 7, or 6 is ON, the indication becomes incorrect. Therefore, when G9, 7 or 6 is ON, BI/RBO of IC/6 is set to "L" and all the outputs a-g are set to "H" so that the switching transistors Q17-23 can be set to OFF. In this way, the display tubes do not respond to the count output of IC9.

The output level of PA-PG is the same as that of G1-7, 9, thereby the segments to be displayed are maintained at a high voltage. The indication of 100MHz digit and 10MHz difit as well as the decimal point remain unchanged regardless of the value counted, so the corresponding digit scan pulse, which passes through the switching diode, is used to light each segment.

For example, the two decimal points will light by D9 and 10, the 100MHz digit "1" by D17 and 18 and the 10MHz digit "4" by D15, 16, 19 and 20.

BAND (K type)	BCD CODE A B C D	DECIMAL NUMBER
144	1 1 0 0	3
145	0 0 1 0	4
146	1 0 1 0	5
147	0 1 1 0	6

Table 2 Preset Input of IC9 (SN74/76N)

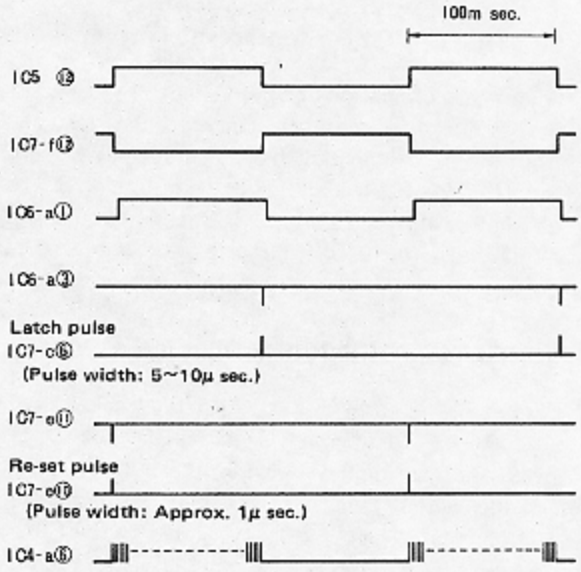

Fig. 4 Timing chart (A), Generation of Latch pulse and Re-set pulse

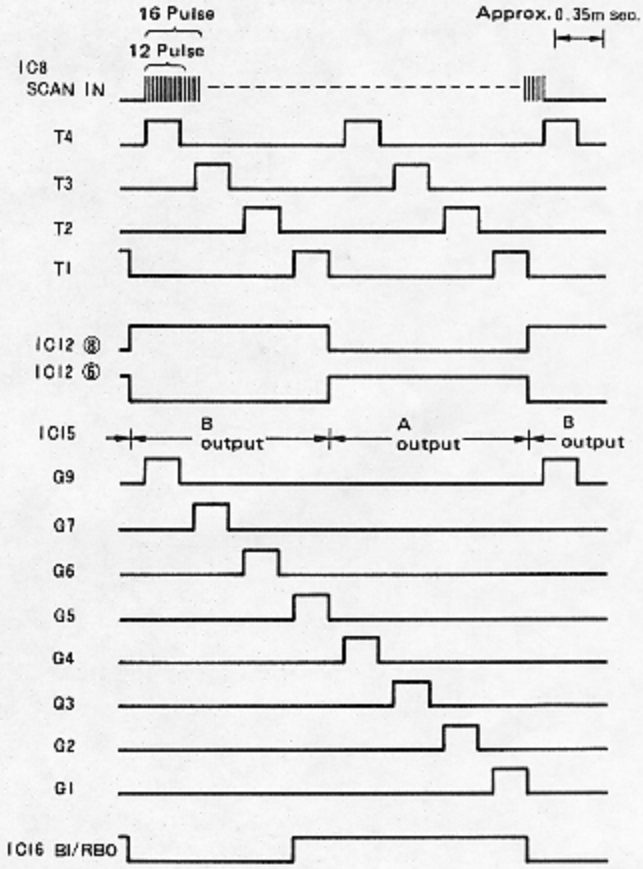

Fig. 5 Timing chart (B)

CIRCUIT DESCRIPTION/MECHANISM DESCRIPTION

9. To Turn OFF Fluorescent Display Tubes

When the oscillation of VFO or FIX CH stops, the fluorescent tube goes off. When VFO stops, the output from the PL terminal of the HET unit is 4.8V and Q8 turns to ON' Since IC11 is and gate, the output is "L" regardless of whether the scan pulse of IC8 is "H" or "L". Thus, the display tubes turns OFF because of the absence of the scan pulse.

10. To Turn OFF 100Hz Digit in FM Mode

During FM operation, the 100Hz digit is less used than in the case of other modes. This digit can be set to OFF as necessary by using the switch as shown in **Fig. 6.**
Set this switch to NORMAL when the mode switch is in FM position. Then, FMB (9V) is fed to the FBL terminal and the base of Q16 becomes "H" level and turns to OFF. At this time, the collector output becomes −24V and thus the 100Hz digit display segment goes off.

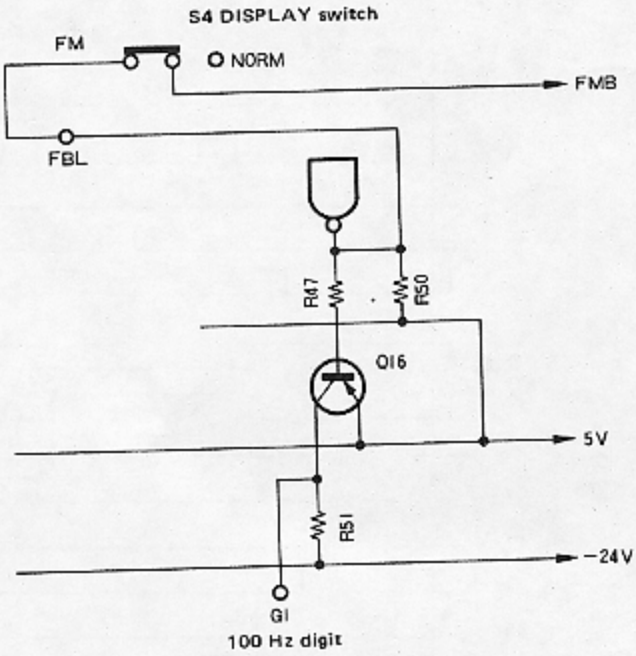

Fig. 6 Turning off Circuit of 100 Hz Digit

1. VFO Knob

The VFO knob is larger (outside 50mmϕ, inside 40mmϕ) than that of TS-700A, providing easier operation and better operating touch. This also improved the flywheel effect, thus permitting the knob to be rotated very smoothly.

2. VFO Gear Mechanism

The unit uses a newly developed clutch type VFO gear mechanism. As shown in **Fig. 7,** the clutch unit is composed of the phase gear A, phase gear B, intermediate phase gear C, and spring. Turning the VFO knob clockwise will operate the clutch between the phase gear A and the one side of the intermediate phase gear C; turning the knob counterclockwise will operate the clutch between the phase gear B and the one side of the intermediate phase gear C. This minimizes the fluctuation of the dial scale during the operation of the clutch. The clutch is positioned at the fianl stage and is operated by turning either the large or small VFO knob, without causing damage to the gear. The operating touch is also improved by the use of new material in the gear.

3. Dial Plate

The dial plate of the unit features digital indication and analog indication. It is calibrated up to 285.6° and is mounted on the shaft of the VFO knob.
When the operating frequency is rapidly changed, the figures tend to twinkle because the digital indication changes quickly. In this case, the dial scale should be set to the approximate operating frequency and then the digital indication used for accurate frequency.

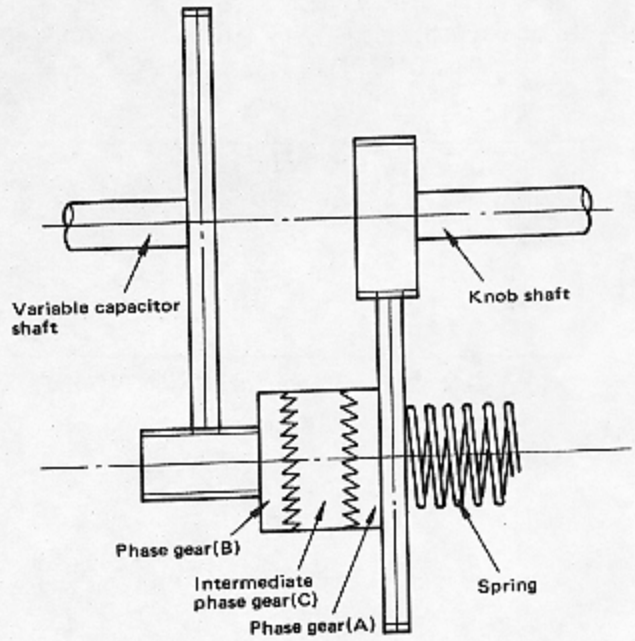

Fig. 7 Clutch Section of VFO Gear Mechanism

SEMICONDUCTORS DATA

2N5642 (FINAL TRANSISTOR)

Item	Code	Rating	Unit
Collector-emitter breakdown voltage	V_{CEO}	35	Vdc
Collector-base breakdown voltage*	V_{CB}	65	Vdc
Emitter-base breakdown voltage	V_{EB}	4.0	Vdc
Collector cut-off current	I_C	3.0	Adc
Allowable loss	P_D	30 171	W mW/°C
Operating ambient temperature	T_{stg} . T_j	−65~200	°C

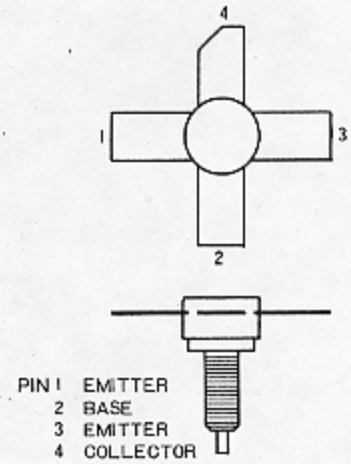

MC1723CL-A (Rectifier unit: Q11)

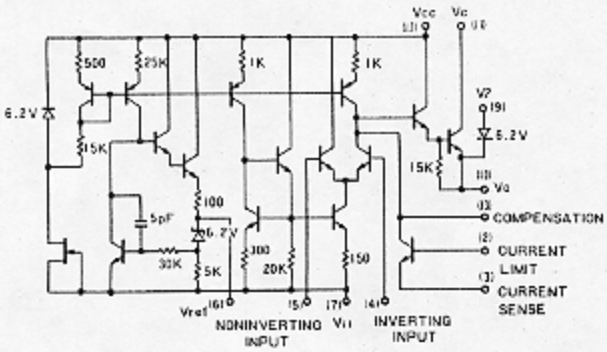

SN76514N (HET unit: Q3)

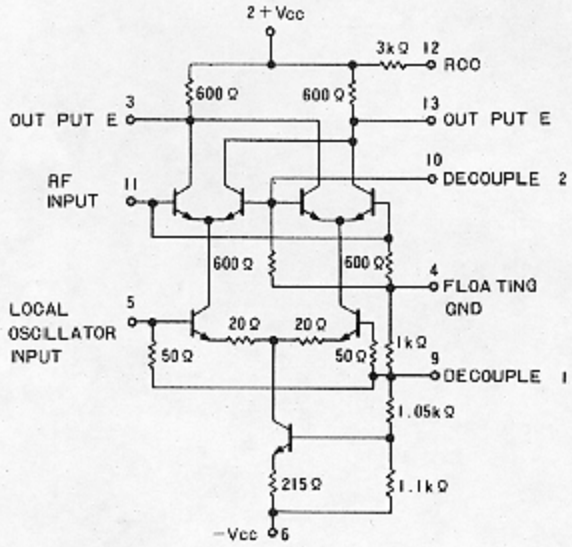

TC5082P (Counter unit: IC2)

PIN CONNECTION

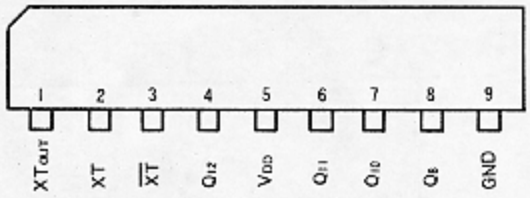

LOGICAL DIAGRAM

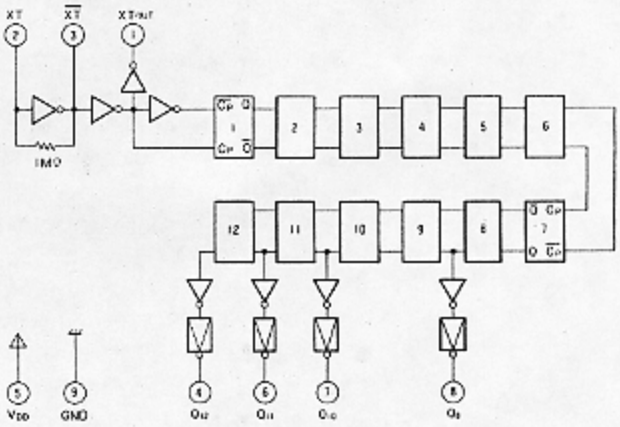

PIN-NO	8	7	6	4	1
PIN NAME	Q_8	Q_{10}	Q_{11}	Q_{12}	XT_{OUT}
Freq. division	1/256	1/1024	1/2018	1/1096	1/1
Output freq. X-tal 10.24MHz	40kHz	10kHz	5 kHz	2.5kHz	10.24MHz

SEMICONDUCTORS DATA

TC4518P (Counter unit: IC4)

PIN CONNECTION

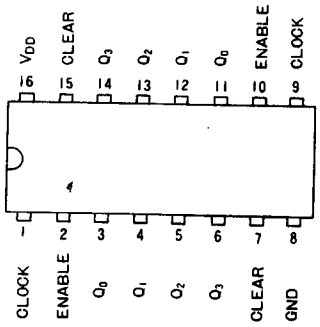

LOGICAL DIAGRAM

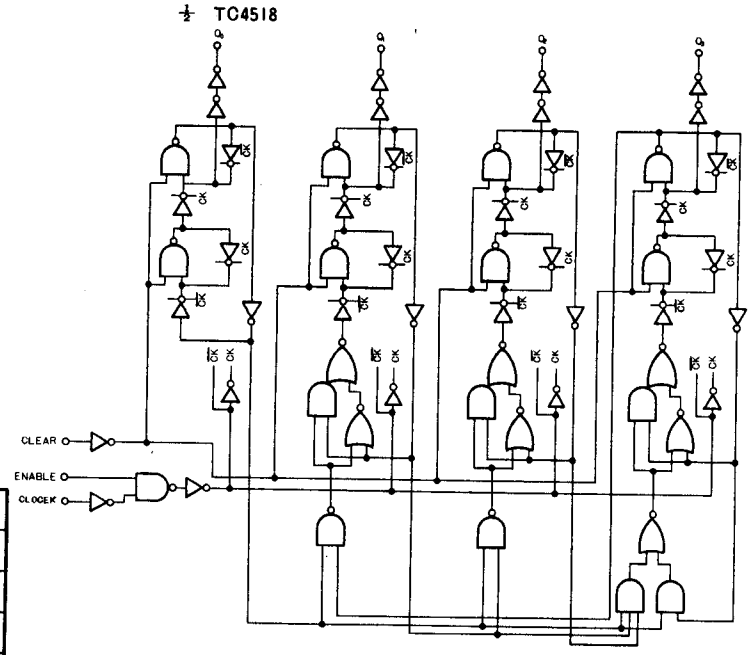

FUNCTION TABLE

CLOCK	ENABLE	CLEAR	OUTPUT=Q
↗	H	L	UP COUNT
↗	L	L	NO CHANGE
↘	☆	L	NO CHANGE
H	↘	L	NO CHANGE
L	↘	L	UP COUNT
☆	↗	L	NO CHANGE
☆	☆	H	L

MSM5502 (Counter unit: IC8)

MSM5502 is a 4-digit counter with built-in oscillator for latch and dynamic lighting; the counting unit is composed of 4 decimal system counters. The output is of a dynamic lighting type, and each digit is selected in turn by the built-in oscillator so as to be fed to BCD OUT.

In the DIGIT SELECT, the digit corresponding to the BCD output becomes "High". In the SCAN IN, the internal oscillator is operated when it is opened or a capacitor is connected between SCAN IN and GND. External frequency (below the internal oscillator frequency) can be applied to SCAN IN. In the LOAD, when it is "High", the information of the counter enters the latch and is delivered to BCD OUT. The output is triggered at the negative edge of the clock pulse. The input/output circuits are of the TTL compatible type.

To latch the date, the LOAD should be set from "High" to "Low" more than 5μS after the count is completed.

The RESET resets the counter at "H". It starts to operate normally from the reset condition.

CIRCUIT CONFIGURATION

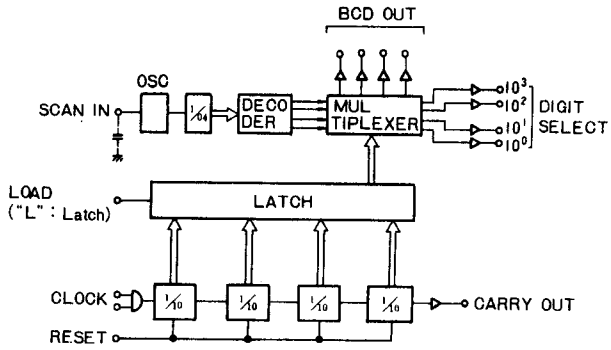

PIN CONNECTION

16 Lead DIP (Resin Type) Top View

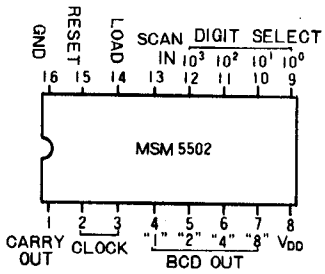

SEMICONDUCTORS DATA

MSM5502 TIMING CHART

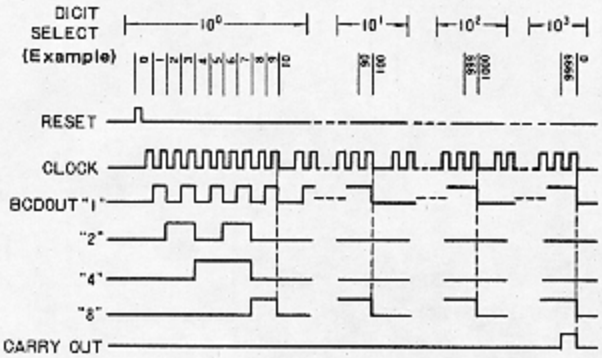

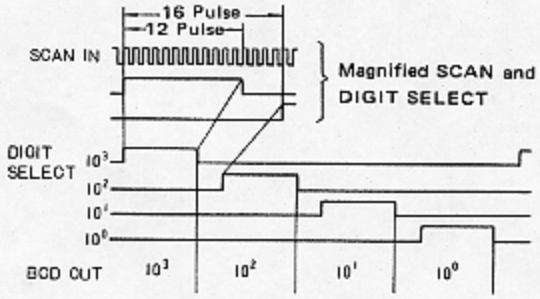

SN74157N

TOP VIEW

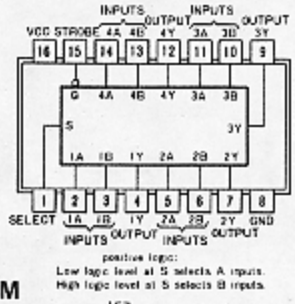

LOGICAL DIAGRAM

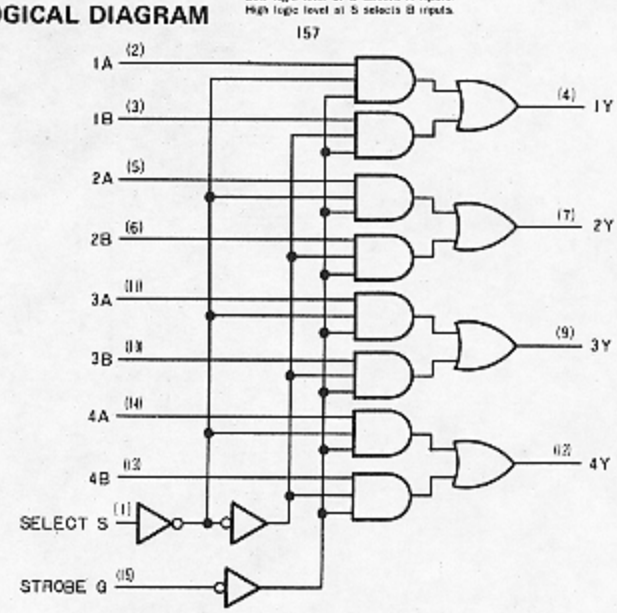

SN74247 (Counter unit: IC16)

FUNCTION TABLE

DECIMAL OR FUNCTION	INPUTS						BI/ROB	OUTPUTS						
	LT	RBI	D	C	B	A		a	b	c	d	e	f	g
0	H	H	L	L	L	L	H	ON	ON	ON	ON	ON	ON	OFF
1	H	X	L	L	L	H	H	OFF	ON	ON	OFF	OFF	OFF	OFF
2	H	X	L	L	H	L	H	ON	ON	OFF	ON	ON	OFF	ON
3	H	X	L	L	H	H	H	ON	ON	ON	ON	OFF	OFF	ON
4	H	X	L	H	L	L	H	OFF	ON	ON	OFF	OFF	ON	ON
5	H	X	L	H	L	H	H	ON	OFF	ON	ON	OFF	ON	ON
6	H	X	L	H	H	L	H	ON	OFF	ON	ON	ON	ON	ON
7	H	X	L	H	H	H	H	ON	ON	ON	OFF	OFF	OFF	OFF
8	H	X	H	L	L	L	H	ON	ON	ON	ON	ON	ON	ON
9	H	X	H	L	L	H	H	ON	ON	ON	ON	OFF	ON	ON
10	H	X	H	L	H	L	H	OFF	OFF	OFF	ON	ON	OFF	ON
11	H	X	H	L	H	H	H	OFF	OFF	ON	ON	OFF	OFF	ON
12	H	X	H	H	L	L	H	OFF	ON	OFF	OFF	OFF	ON	ON
13	H	X	H	H	L	H	H	ON	OFF	OFF	ON	OFF	ON	ON
14	H	X	H	H	H	L	H	OFF	OFF	OFF	ON	ON	ON	ON
15	H	X	H	H	H	H	H	OFF	OFF	OFF	OFF	OFF	OFF	OFF
BI	X	X	X	X	X	X	L	OFF	OFF	OFF	OFF	OFF	OFF	OFF
RBI	H	L	L	L	L	L	L	OFF	OFF	OFF	OFF	OFF	OFF	OFF
LT	L	X	X	X	X	X	H	ON	ON	ON	ON	ON	ON	ON

SEGMENT IDENTIFICATION

EXTERNAL VIEW

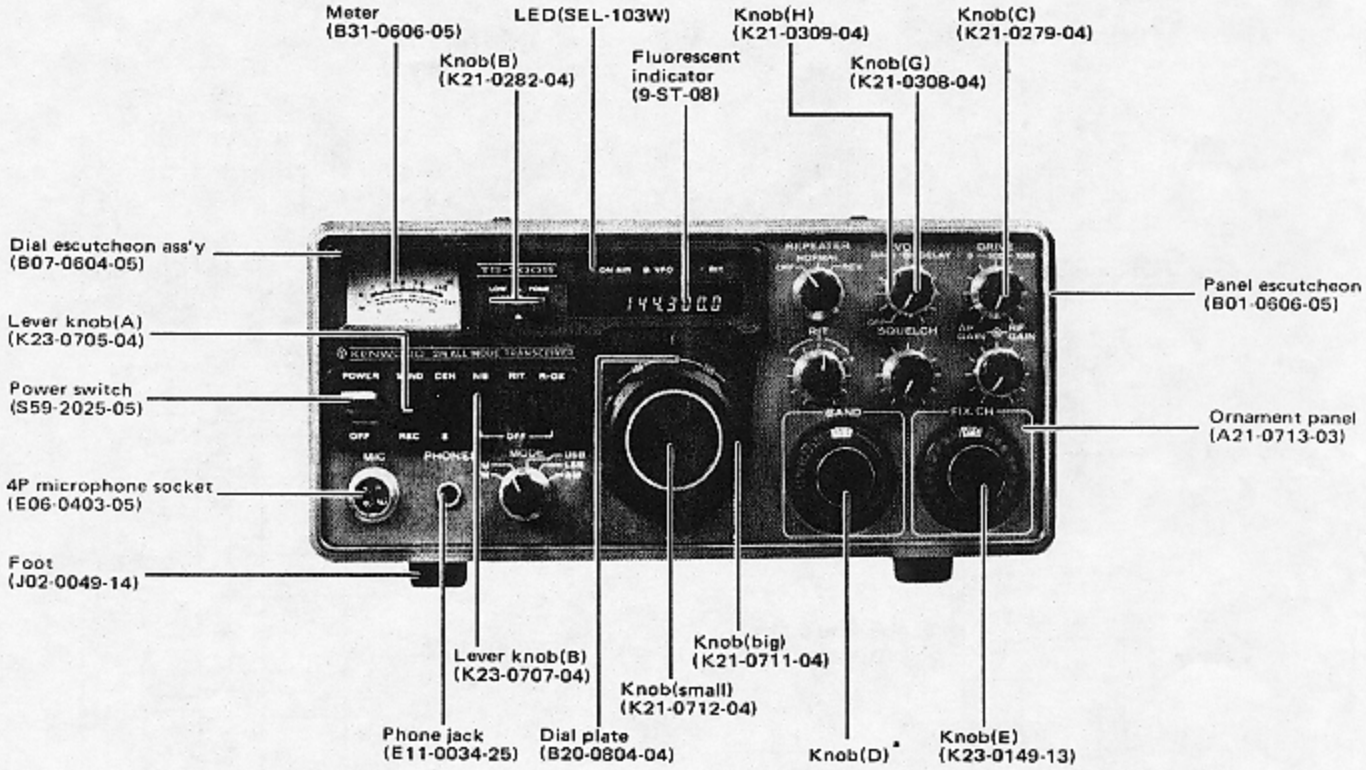

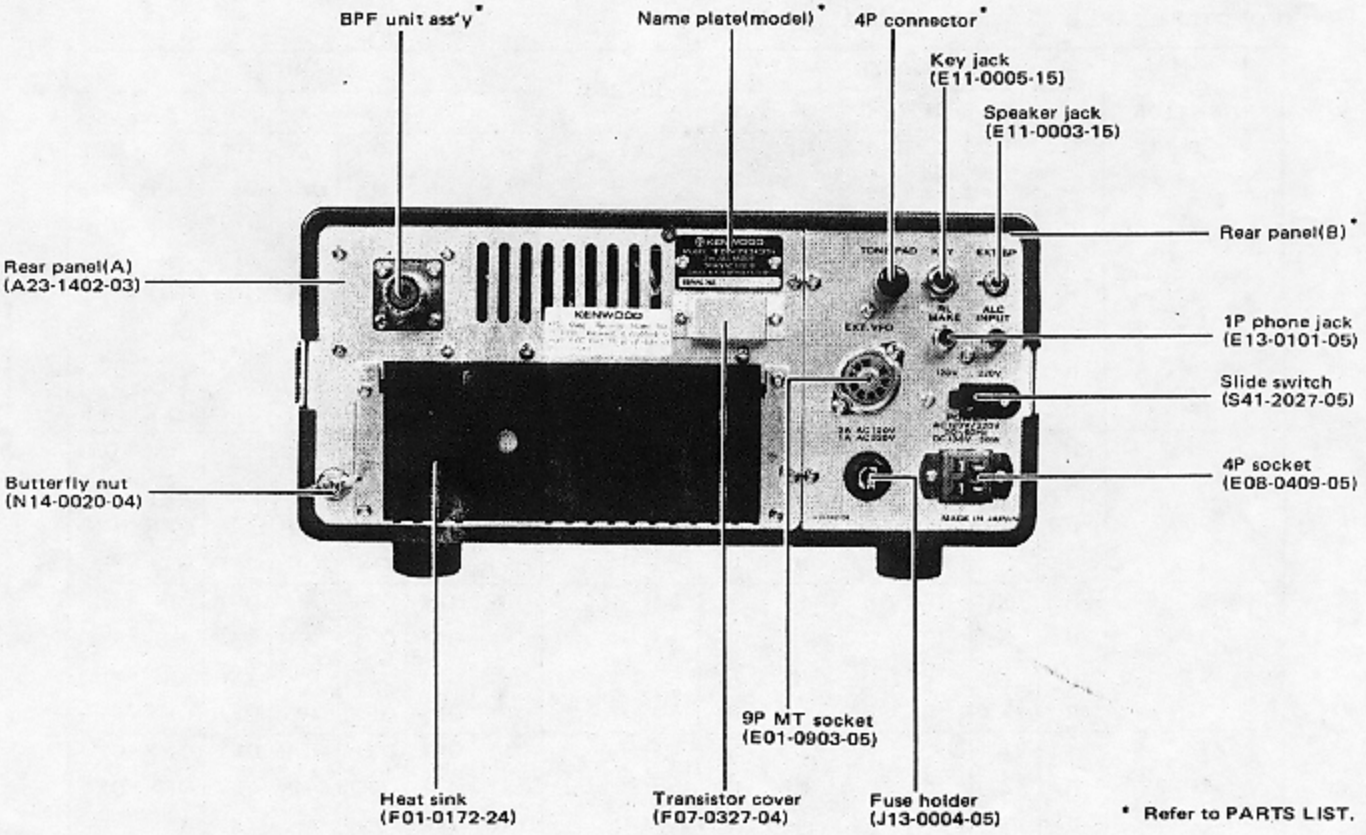

* Refer to PARTS LIST.

PC BOARD

▼ VFO UNIT (X40-1080-02)

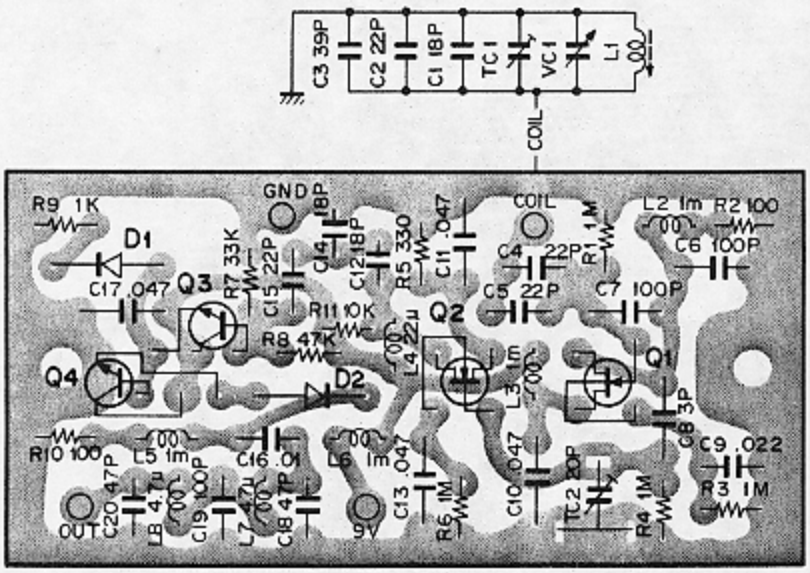

Q1, 2:3SK22(Y), Q3, 4:2SC460(B), D1, 2:1N60

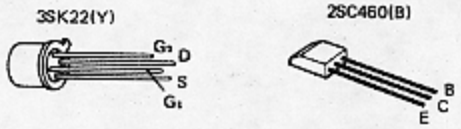

▼ SWITCH UNIT (X41-1060-00)

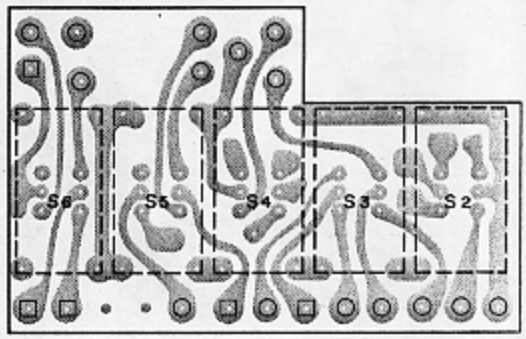

▼ PC BOARD FOR ROTARY SWITCH (J25-2529-04) W, T type

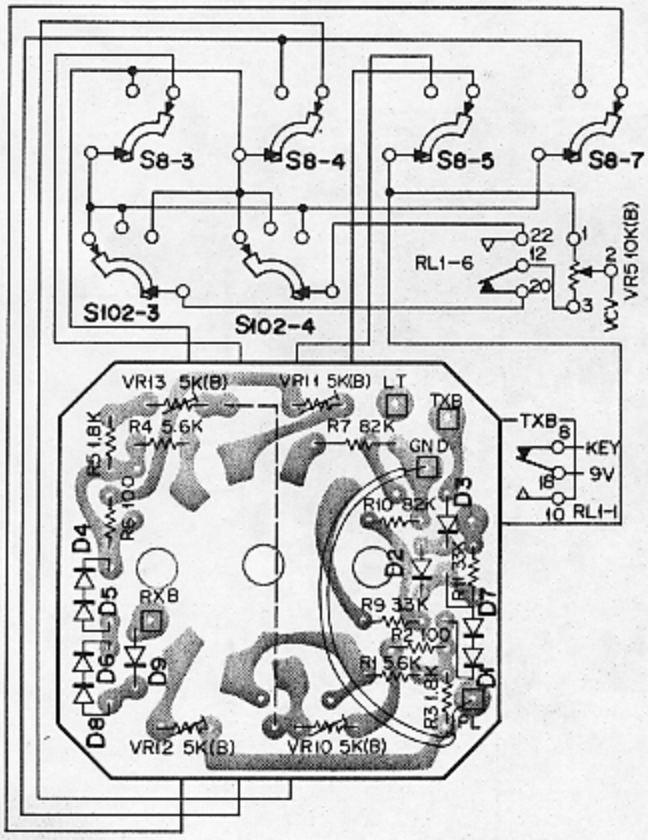

D1~9:1N60

▼ PC BOARD FOR ROTARY SWITCH (J25-1396-04) K type

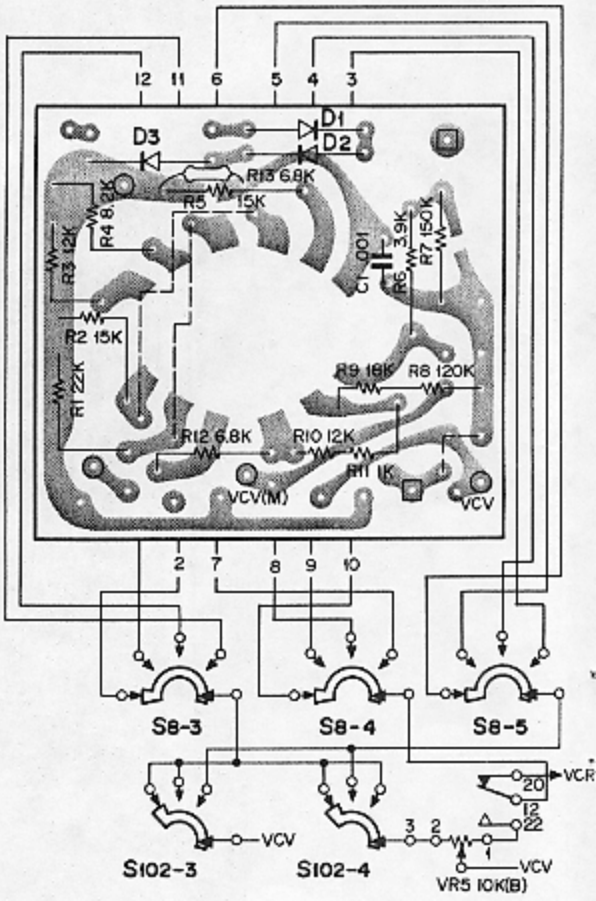

D1~3:1N60

PC BOARD

▼ RECTIFIER UNIT (X43-1240-01)

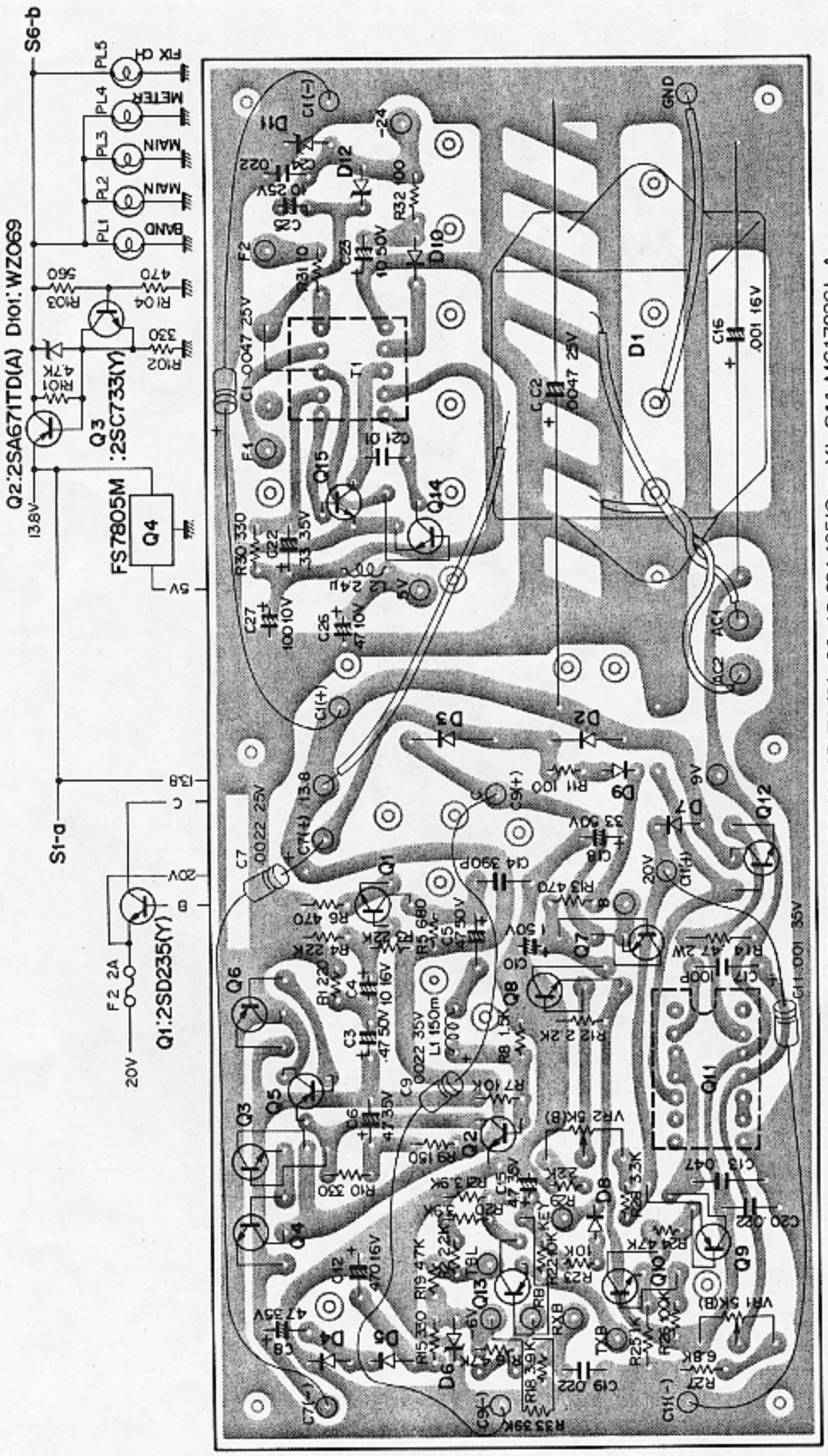

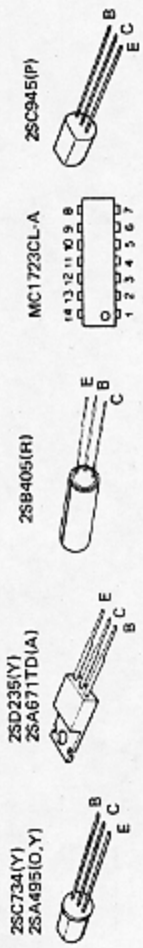

Q1~3, 7, 8, 10:2SC734(Y), Q4, 12:2SD235(Y), Q5:2SB405(R), Q6:2SA671TD(B), Q9, 13:2SA495(O or Y), Q11:MC1723CL-A, Q14, 15:2SC945(P), D1:DS-10BN-L, D2, 3:U05B, D4, 5, 7:V06B, D6, 12:WZ-061, D8, 10:1S1555, D9:1N60, D11:BZ-240

PC BOARD

▼ FM · IF UNIT (X48-1140-20) K type
(X48-1140-61) W type
(X48-1140-51) T type

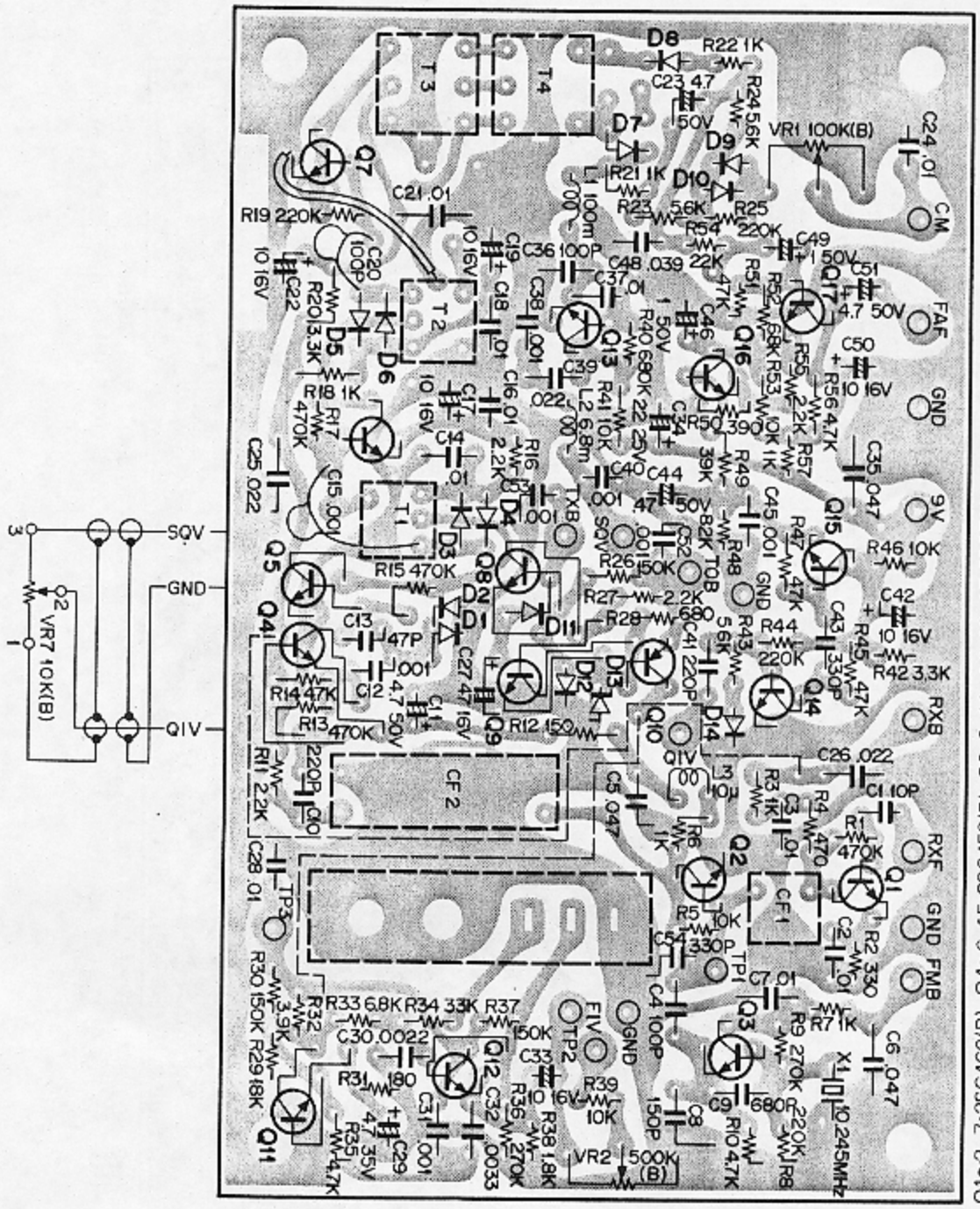

Q1~3, 7:2SC460(B), Q4~6, 15:2SC458(B), Q8, 9, 11~14, 16, 17:2SC733(Y)
Q10:2SA562(Y), D1, 2, 7, 8:1N60, D3~6, 9~12, 14:1S1555, D13:WZ-061

FM · IF UNIT DESTINATIONS' PARTS LIST

	K type (-20)	W type (-61)	T type (-51)
R26, 27, 28	○	–	○
C27, 28, 52, 53	○	–	○
Q8, 9, 10	○	–	○
D11, 12, 13	○	–	○
Piezo-electric tuning fork	–	○	○
Terminal	13	16	18

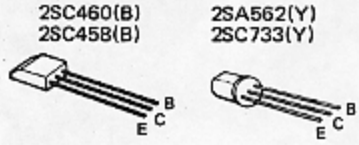

PC BOARD

▼ MIX UNIT (X48-1130-00)

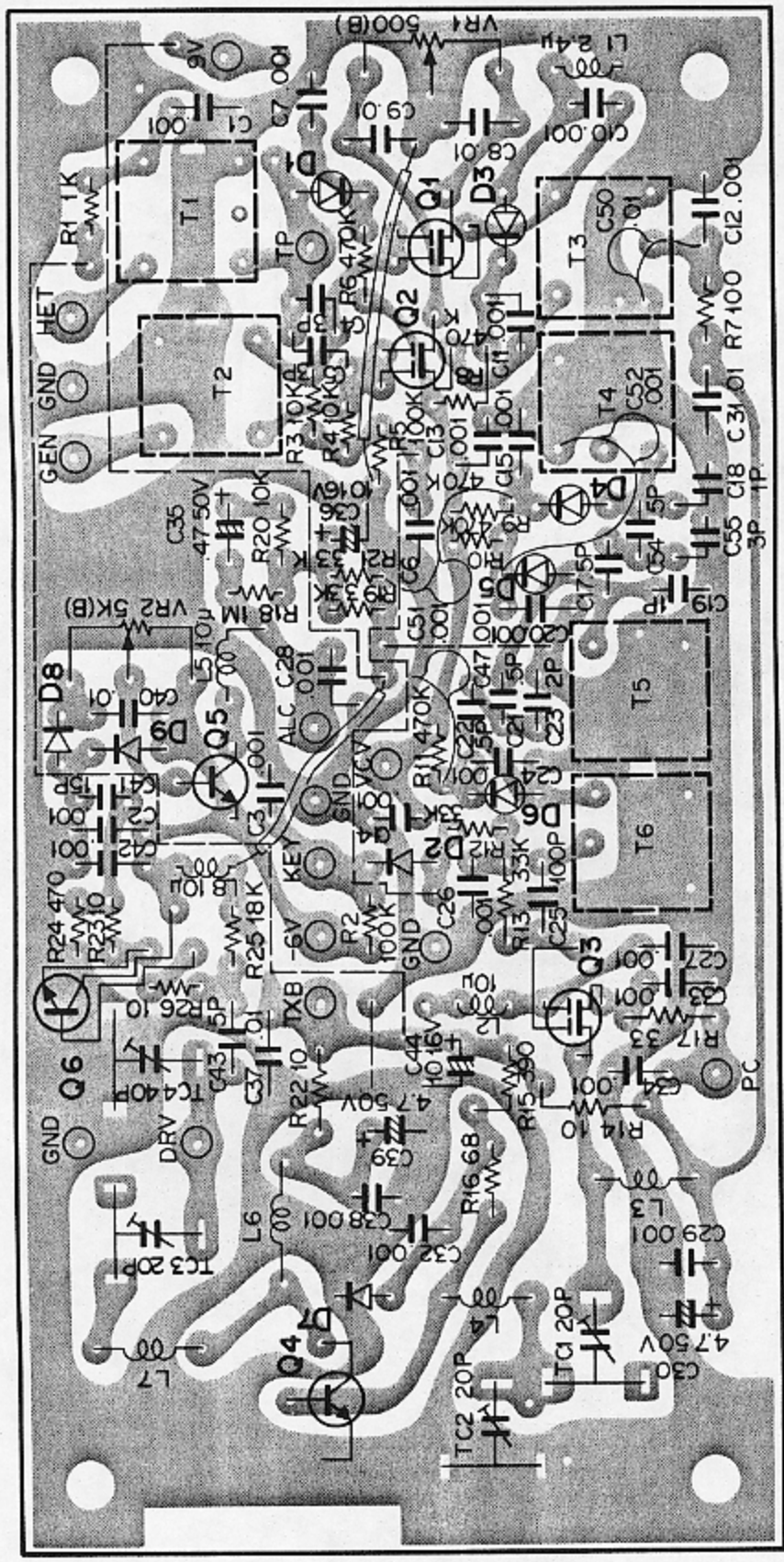

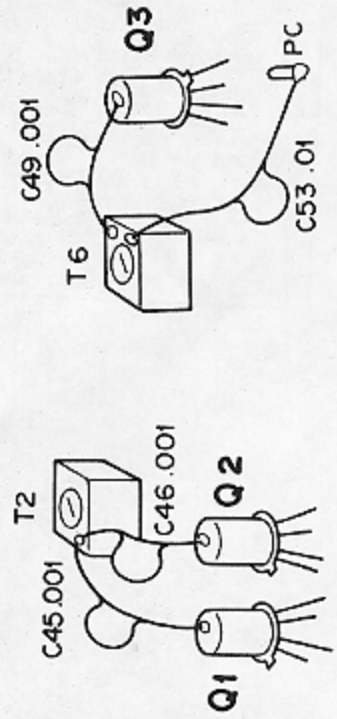

Q1~3:3SK41(L or M) or 3SK40(L or M), Q4:2SC998, Q5:2SC733(Y), Q6:2SC388A, D1, 3~6:1S2208,
D2, 7:1S1555, D8, 9:1N60

PC BOARD

▼ AF UNIT (X49-1060-00)

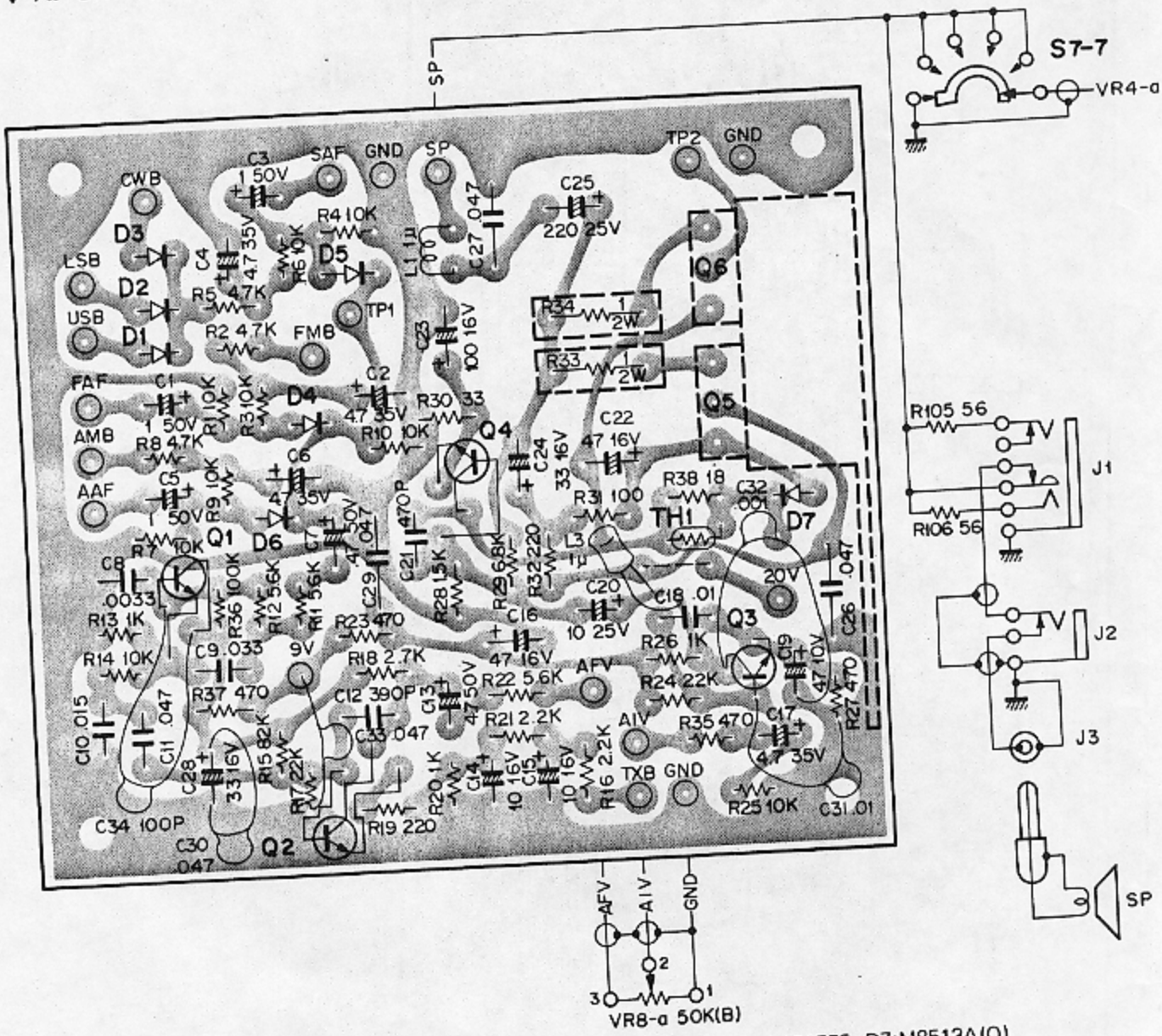

Q1~3:2SC733(Y), Q4:2SC734(Y), Q5:2SC1061(B), Q6:2SA671TD(A), D1~6:1S1555, D7:M8513A(O),
TH1:SDT-06

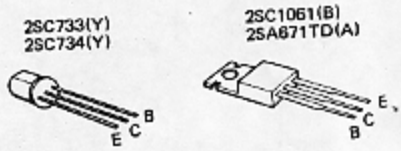

PC BOARD

▼ HET UNIT (X50-1410-11) K type
(X50-1410-61) W, T type

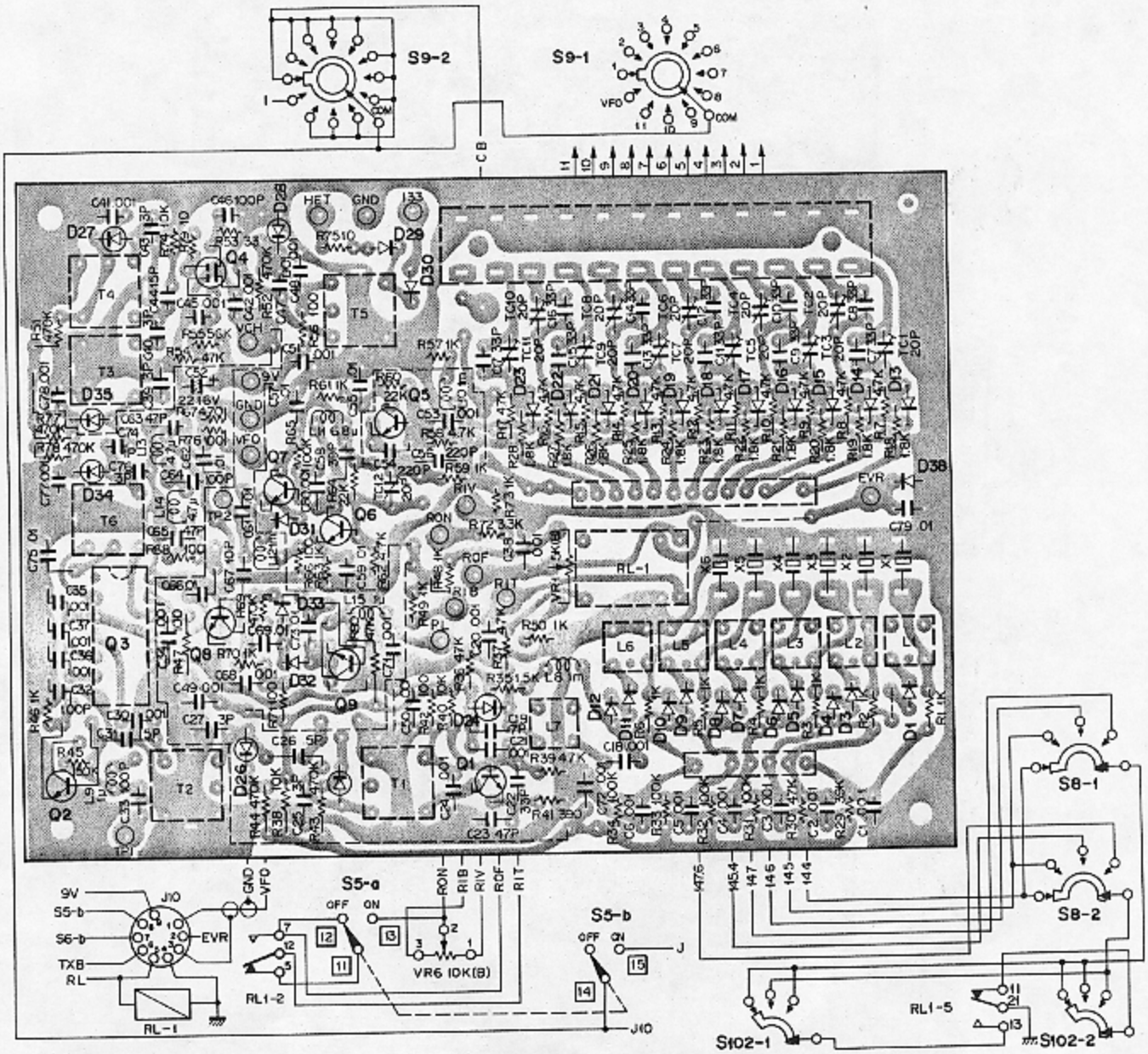

Q1:2SC388A, Q2, 8:2SC460(B), Q3:SN76514N, Q4:3SK41(L) or 3SK40(L), Q5~7:2SC458(B), Q9:2SC733(Y), D1:1S1587, D3~23, 29, 30, 38:1S1555, D24~28, 34, 35:1S2208, D31~33:1N60

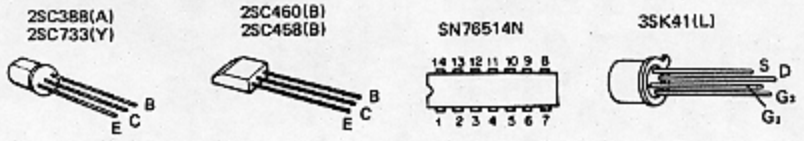

HET UNIT DESTINATIONS' PARTS LIST

	C4~6	C25, 27 39	C43	C47	C76	C77, 78	R4~6, 32~34 43, 44, 52, 77, 78	D1	D2	D7~12	D25, 26, 28 34, 35	L4~6
K type (-11)	1000 pF	3 pF	3 pF	1000 pF	3 pF	1000 pF	○	1S1587	–	1S1555	1S2208	○
W, T type (-61)	–	10 pF	5 pF	7 pF	7 pF	–	–	1S1555	1S1555	–	–	–

PC BOARD

▼ CAR · VOX UNIT (X50-1420-00)

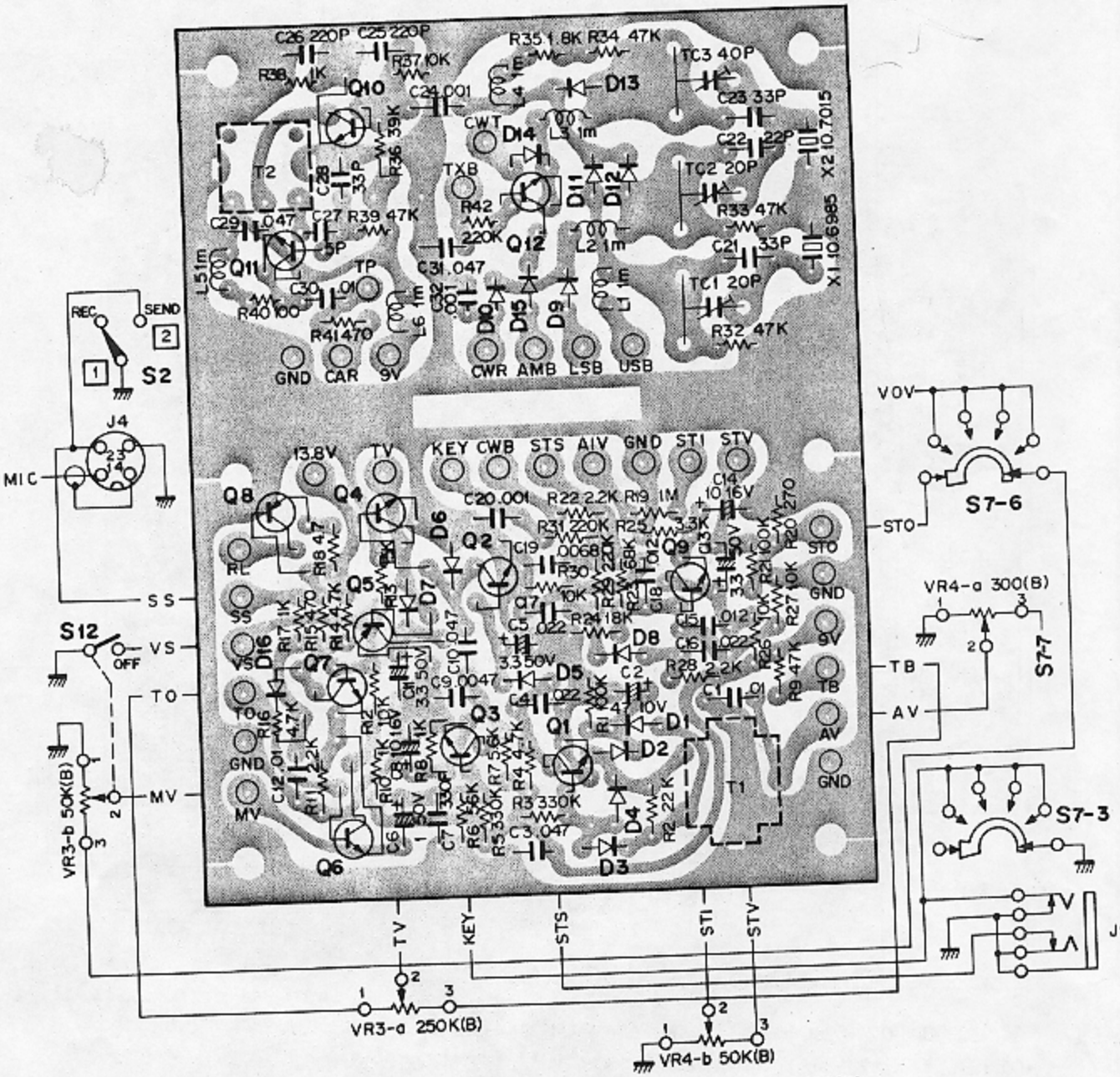

Q1, 2, 4, 6, 7, 9, 11, 12:2SC733(Y), Q3:2SC1000(GR), Q5, 8:2SA562(Y), Q10:2SC460(B),
D1~4, 6~8:1N60, D5, 9~16:1S1555

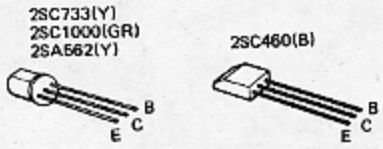

PC BOARD

▼ GENERATOR UNIT (X52-1080-21)

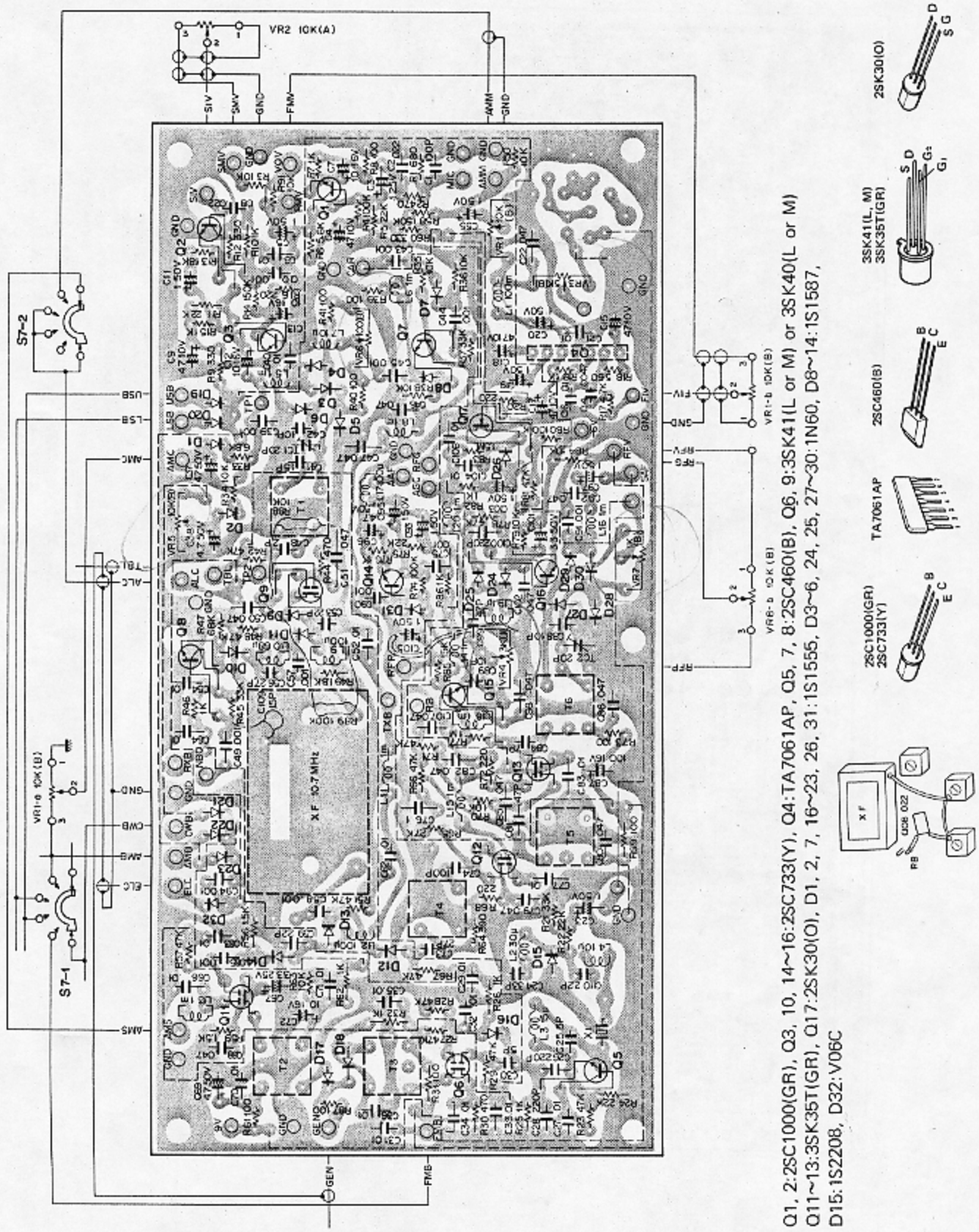

Q1, 2:2SC1000(GR), Q3, 10, 14~16:2SC733(Y), Q4:TA7061AP, Q5, 7, 8:2SC460(B), Q6, 9:3SK41(L or M) or 3SK40(L or M)
Q11~13:3SK35T(GR), Q17:2SK30(O), D1, 2, 7, 16~23, 26, 31:1S1555, D3~6, 24, 25, 27~30:1N60, D8~14:1S1587,
D15:1S2208, D32:V06C

PC BOARD

▼ COUNTER UNIT (X54-1250-11) K type
(X54-1250-61) W, T type

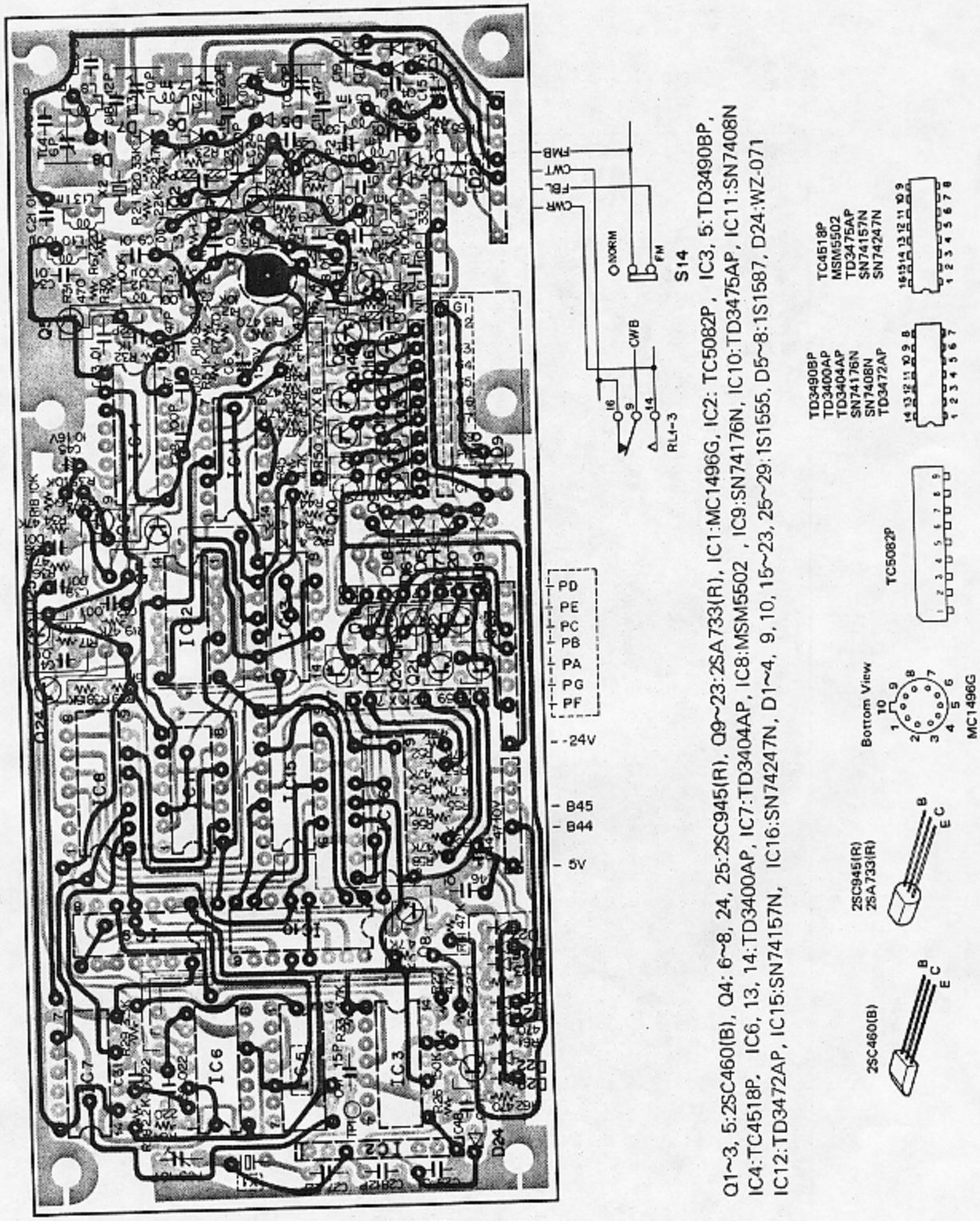

Q1~3, 5:2SC460(B), Q4: 6~8, 24, 25:2SC945(R), Q9~23:2SA733(R), IC1:MC1496G, IC2: TC5082P, IC3, 5:TD3490BP, IC4:TC4518P, IC6, 13, 14:TD3400AP, IC7:TD3404AP, IC8:MSM5502 , IC9:SN74176N, IC10:TD3475AP, IC11:SN7408N IC12:TD3472AP, IC15:SN74157N, IC16:SN74247N, D1~4, 9, 10, 15~23, 25~29:1S1555, D5~8:1S1587, D24:WZ-071

COUNTER UNIT DESTINATIONS' PARTS LIST

	C2	D25~28	3P pin connector	5P pin connector
K type (-11)	22 pF	1S1555	○	2
W, T type (-61)	47 pF	–	–	–

PC BOARD

▼ RX · NB UNIT (X55-1170-11) K type
(X55-1170-00) W, T type

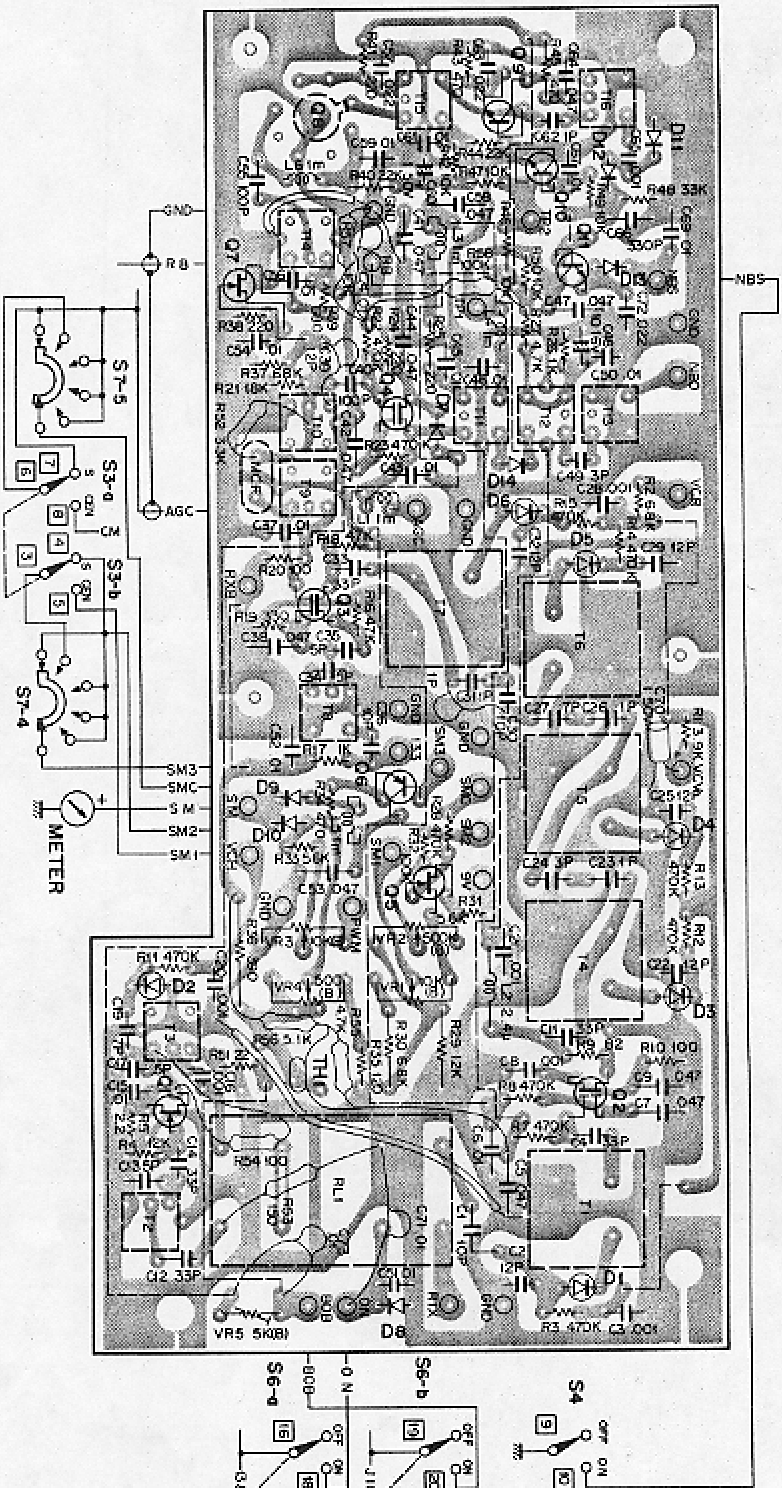

Q1:2N5485, Q2:3SK41(L) or 3SK40(L), Q3:3SK41(M) or 3SK40(M), Q4:3SK35T(GR), Q5, 7:2SK19(GR), Q6:2SA495(Y),
Q8:TA7045M(R), Q9:2SC460(B), Q10, 11:2SC733(Y), D1~6:1S2206, D7, 8:1S1555, D9~13:1N60, D14:1SS16

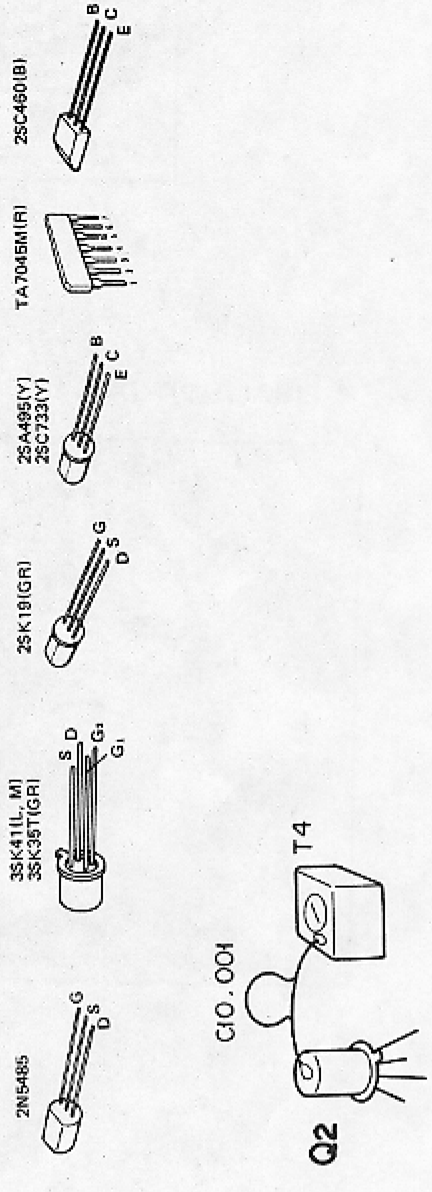

RX · NB UNIT DESTINATIONS' PARTS LIST

	C13	C15	C17	C19	C20	R4	R5	R11	D2	Terminal
K type (-11)	5 pf	0.01 μF	0.5 pF	7 pF	1000 pF	15 kΩ	2.2 kΩ	470 kΩ	1S2208	27
W, T type (-11)	2 pF	–	5 pF	–	–	12 kΩ	–	–	–	28

PC BOARD

▼ DISPLAY UNIT (X54-1240-11)

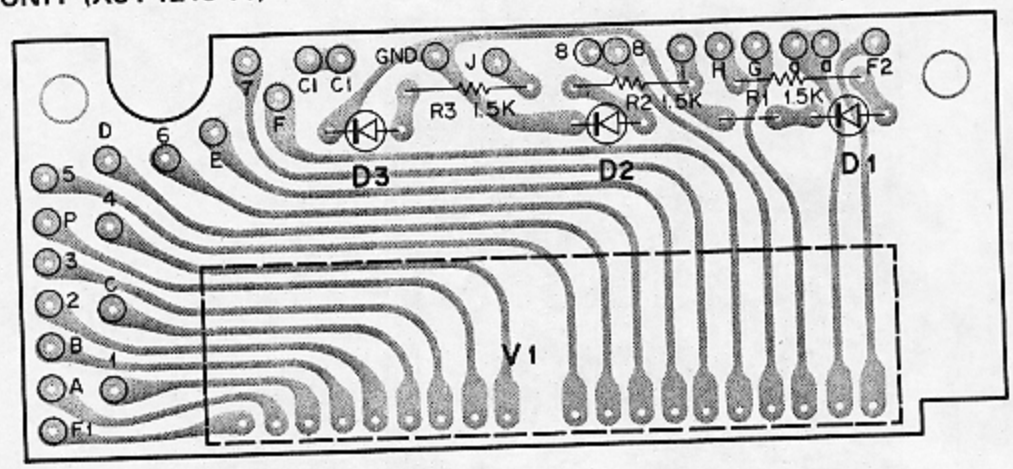

V1:9-ST-08, D1~3:SEL-103W

▼ FINAL UNIT (X56-1250-00)

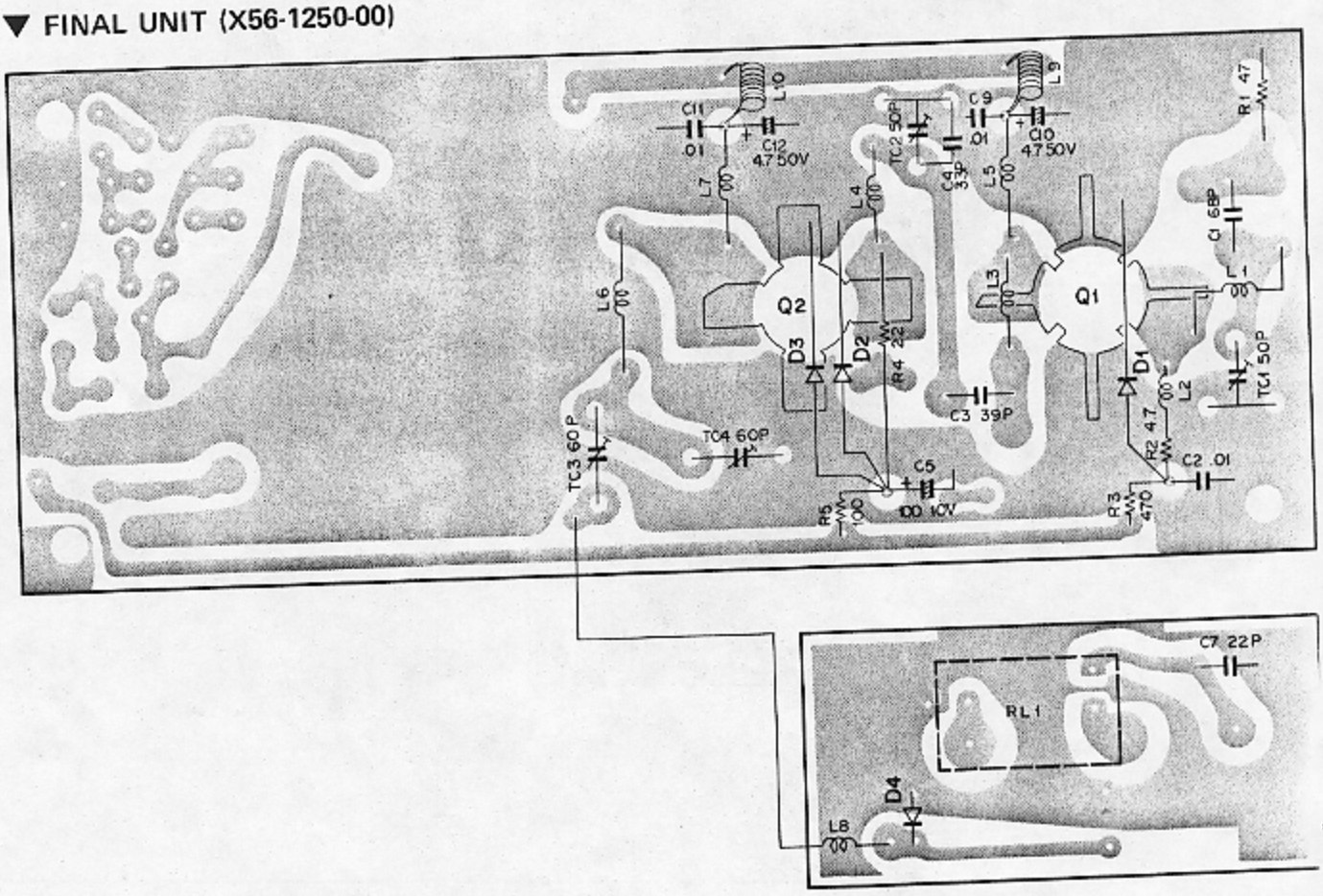

Q1:2N5641, Q2:2N5642, D1~3:1S1555, D4:V06J

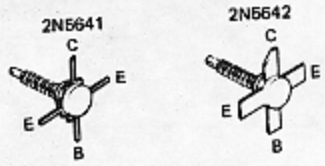

PARTS LIST

Note 1:
Resistors except the special type (example: cement, metal film, etc.) are not detailed in PARTS LIST. With regard to the value, refer to the schematic diagram or the PC board illustration.
Resistors not detailed are carbon type (1/4W or 1/8W).
You should give an order for the carbon resistors according to the ways described as follows:
A carbon resistor's part number is example RD14BY 2E 222J

1. Kinds of the carbon resistor

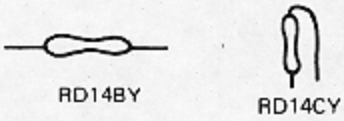

2. Wattage

1/4W → 2E
1/8W → 2B

3. Resistance value

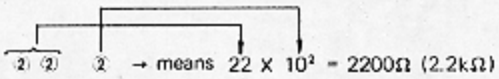

Significant figure Multiplier

Example:

221 → 220Ω
222 → 2.2kΩ
223 → 22kΩ
224 → 220kΩ
225 → 2.2MΩ

4. Tolerance

J = ±5% (Gold color)
K = ±10% (Silver color)

Note 2:
K: U.S.A. W: Europe T: Britain

TOTAL ☆: New Parts

Ref. No.	Parts No.	Description	Remarks
		CAPACITOR	
C1	CK45D1H102M	Ceramic 1000pF ±20% K	
C101	C90-0187-05	Ceramic 4700pF	
C102	CK45F1H103Z	Ceramic 0.01μF +80%, −20%	
		RESISTOR	
R1~13	RD14BY2BOOOJ	Carbon OOOO ±5% 1/8W K	
R1, 3~5, 7, 9~11	RD14CY2BOOOJ	Carbon OOOO ±5% 1/8W T,W	
R101~106	RD14BY2EOOOJ	Carbon OOOO ±5% 1/4W	
R107	RD14BY2B103J	Carbon 10KΩ ±5% 1/8W K	
		SEMICONDUCTOR	
Q1	V04-0046-05	Transistor 2SD235(Y)	
Q2	V01-0138-05	Transistor 2SA671TD(A)	
Q3	V03-0123-05	Transistor 2SC733(Y)	
Q4	V30-1001-16	IC FS7805M	
D1~3	V11-0051-05	Diode 1N60	
D4~9	V11-0051-05	Diode 1N60 T,W	
D101	V11-4160-76	Zener diode WZ069	
D102	V11-0243-05	Zener diode WZ061	
		POTENTIOMETER	
VR1	R06-3401-05	10KΩ (B) FM MIC (Inside) 10KΩ (B) AM CAR (Outside)	☆
VR2	R01-3403-05	10KΩ (A) SSB MIC	☆
VR3	R08-9401-05	50KΩ (B) VOX GAIN (Inside) 250KΩ (B) VOX DELAY (Outside)	☆
VR4	R06-9401-05	50KΩ (B) ANTI VOX (Outside) 300Ω (B) SIDE TONE (Inside)	☆
VR5,6	R03-3055-05	10KΩ (B) RIT, DRIVE	
VR7	R01-3402-05	10KΩ SQU	☆
VR8	R08-9010-05	50KΩ (A) AF GAIN (Inside) 10KΩ (B) RF GAIN (Outside)	
VR9	R12-1016-05	Semi-fixed resistor 3kΩ (B)	
VR10~13	R12-2401-05	Semi-fixed resistor 5KΩ (B) T,W	
		SWITCH	
S1	S59-2025-05	Paddle switch (Gray) POWER	
S7	S01-4402-05	Rotary switch MODE	
S8	S01-2036-05	Rotary switch BAND K	
S8	S01-2404-05	Rotary switch BAND T,W	☆
S9	S01-2021-05	Rotary switch FIX. CH	
S10	S40-2059-05	Push switch CALL K,T	
S10	S40-2066-05	Push switch CALL W	
S11	S40-2059-05	Push switch LOW	
S101	S41-2027-05	Slide switch POWER SELECT	
S102	S01-1030-05	Rotary switch REPEATER	
RL1	S51-6001-15	Relay	
		CRYSTAL	
X1	L77-0358-05	Crystal oscillator 125.109 MHz	
X2	L77-0359-05	Crystal oscillator 126.109 MHz	
X3	L77-0361-05	Crystal oscillator 127.109 MHz K	
X3	L77-0363-05	Crystal oscillator 125.509 MHz W, T	
X4	L77-0362-05	Crystal oscillator 128.109 MHz K	
X5	L77-0501-05	Crystal oscillator 126.509 MHz K	
X6	L77-0502-05	Crystal oscillator 128.709 MHz K	

PARTS LIST

Re. No.	Parts No.	Description	Re-marks
BPF UNIT ASS'Y (L79-0432-05) K type (L79-0430-05) W, T type			
–	CE04W1H4R7	Electrolytic 4.7μF 50WV	
–	V11-0374-05	Diode 1SS16	
–	C02-0006-05	Trimmer x3 K	☆
–	C02-0006-05	Trimmer x2 W, T	☆
–	E22-0207-05	Lug terminal	
–	E23-0001-05	Hermetic terminal x2	
TRANSFORMER/COIL			
T1	L06-0027-35	Power transformer	
L101, 102	L40-4711-03	Ferri-inductor 470μH	
SPEAKER/MICROPHONE			
–	T13-0006-15	Speaker	
–	T91-0030-05	Microphone K, W	
–	T91-0029-05	Microphone T	
MISCELLANEOUS			
–	A01-0226-13	Case (Upper)	
–	A01-0227-13	Case (Lower)	
–	A21-0713-03	Ornament panel	☆
–	A23-1402-03	Rear panel (A)	☆
–	A23-1412-04	Rear panel (B) K	
–	A23-1409-04	Rear panel (B) W	
–	A23-1410-04	Rear panel (B) T	
–	B01-0081-13	Escutcheon	
–	B01-0082-13	Escutcheon (Handle side)	
–	B01-0606-05	Panel escutcheon	☆
–	B07-0604-05	Dial escutcheon ass'y	☆
–	B19-0156-04	Filter x2 (BAND, FIX)	
–	B20-0804-04	Dial plate	☆
–	B30-0079-05	Pilot lamp x2 BAND, FIX. CH	
–	B30-0804-05	Pilot lamp x3 Meter, VFO x2	☆
–	B31-0606-05	Meter	☆
–	B40-2419-04	Name plate (Model) K, W	☆
–	B40-2407-04	Name plate (Model) T	☆
–	B42-1619-04	Name plate (Adjustment)	
–	B42-1620-04	Name plate K, W	☆
–	B42-1608-04	Name plate T	
–	B43-0603-04	Badge	☆
–	B46-0058-00	Warranty card K	
–	B50-2549-00	Operating manual K	☆
–	B50-2550-00	Operating manual W	☆
–	B50-2551-00	Operating manual T	☆
–	D32-0075-04	Switch stopper	
J10	E01-0903-05	9P MT socket	
–	E05-0901-05	9P MT plug	
J4	E06-0403-05	4P microphone socket	
J8	E08-0409-05	4P socket	
–	E08-0471-05	4P connector socket K	
–	E09-0471-05	4P connector plug K	
–	E09-0204-05	2P plug	
J2	E11-0003-15	Speaker jack	
J9	E11-0005-15	KEY jack	
J1	E11-0034-25	Phone jack	
–	E12-0001-05	Phone plug	
J3,6,7	E13-0101-05	1P phone jack x3	
–	E14-0101-05	1P phone plug x4	
–	E22-0207-05	Lug terminal x3	
–	E22-0405-05	Lug terminal x3	
–	E23-0015-04	Earth lug terminal x4	
–	E23-0046-04	Terminal K	
–	E23-0046-04	Terminal x7 W, T	

Ref. No.	Parts No.	Description	Re-marks
–	E30-0573-05	6P connector with lead wire	
–	E30-0574-05	12P connector with lead wire	
–	E30-1604-05	6P connector with lead wire	
–	E30-1605-05	6P connector with lead wire	
–	E31-0414-15	5P connector with lead wire	
–	E31-0415-05	3P connector with lead wire T, W	
–	E31-0416-05	7P connector with lead wire	
–	E31-0419-05	5P connector with lead wire K	
–	F05-1023-05	Fuse 1A K	
–	F05-1023-05	Fuse 1A x2 W, T	
F1, 2	F05-2023-05	Fuse 2A x4 K	
F1, 2	F05-2023-05	Fuse 2A x3 W	
F1, 2	F05-2023-05	Fuse 2A x2 T	
–	F05-5022-05	Fuse 5A for DC cord	
–	F15-0164-14	Speaker mask	
–	F15-0165-14	Switch mask (switch unit)	
–	F15-0606-04	Switch mask (B) (push switch)	☆
–	F15-0612-04	Switch mask (switch unit)	☆
–	F20-0078-05	Insulating mica	
–	G13-0602-04	Cushion x2 case upper	
–	G13-0605-04	Cushion (B) back of meter	☆
–	G13-0613-04	Speaker felt X 2	
–	H01-2536-04	Carton case (inside) K, W	☆
–	H01-2537-04	Carton case (inside) T	☆
–	H10-1274-02	Polystyrene foam cushion (A)	
–	H10-1275-02	Polystyrene foam cushion (B)	
–	H10-1276-04	Cushion	
–	H20-0291-03	Protection cover	
–	H25-0016-00	Polyethylene bag for accessories	
–	H25-0036-00	Polyethylene bag for accessories	
–	J02-0022-05	Foot x4 15φ	
–	J02-0049-14	Foot x6 28φ	
–	J13-0004-05	Fuse holder (rear panel)	
–	J13-0019-05	Fuse holder (inside of case)	
–	J25-1396-04	PC board (A) for rotary switch K	☆
–	J25-2529-04	PC board (A) for rotary switch W, T	☆
–	J25-2557-04	PC board (B) for push switch	☆
–	J30-0061-04	Rubber spacer x2	
–	J32-0188-04	Hex. boss (D) 21x3 (mm)	
–	J32-0189-04	Hex. boss (A) x4 35x3 (mm)	
–	J32-0190-04	Hex. boss (B) x4 27.5x3 (mm)	
–	J32-0218-04	Hex. boss (C) x4 5.5x3 (mm)	
–	J32-1030-14	Round boss x2 (front foot)	
–	J39-0028-04	Spacer hardware x2	
–	J59-0001-05	Grommet x2	
–	J59-0002-05	Plunger x2	
–	K01-0063-05	Handle	
–	K21-0279-04	Knob (C) x5 RIT, SQU etc.	
–	K21-0282-04	Knob (B) x2 Push switch	
–	K21-0308-04	Knob (G) x2 AF, VOX GAIN	
–	K21-0309-04	Knob (H) x2 RF, VOX DELAY	
–	K21-0711-04	Knob (big) main	☆
–	K21-0712-04	Knob (small) main	☆
–	K23-0235-03	Knob (D) BAND K	
–	K23-0148-03	Knob (D) BAND T, W	
–	K23-0149-13	Knob (E) FIX. CH	
–	K23-0057-04	Rubber knob	
–	K23-0703-04	Rubber knob (big) x2	☆
–	K23-0704-04	Rubber knob (small) x2	☆
–	K23-0705-04	Lever knob (A) SEND/REC	☆
–	K23-0707-04	Lever knob (B) x4	☆
–	N09-0155-04	Lock screw x2	
–	N10-2030-11	Nut x3	
–	N10-3020-46	Nut	
–	N10-3060-11	Nut	

PARTS LIST

Ref. No.	Parts No.	Description		Re-marks
–	N14-0020-04	Butterfly nut		
–	N15-1020-46	Washer x2		
–	N16-0030-41	Spring washer x5		
–	N16-0060-41	Spring washer		
–	N17-1030-46	Lock washer		
–	N19-0089-00	Washer x2		
–	N19-0201-05	Insulating washer		
–	N30-2004-41	Round head screw x2		
–	N30-2604-41	Round head screw x4		
–	N30-2606-41	Round head screw x2		
–	N30-3004-41	Round head screw x7		
–	N30-3006-41	Round head screw x29		
–	N30-3008-41	Round head screw x4		
–	N30-3012-41	Round head screw x2		
–	N30-4006-41	Round head screw x4		
–	N30-4012-41	Round head screw x2		
–	N30-6018-41	Round head screw x2		
–	N32-2604-41	Flat head screw x3		
–	N32-3006-41	Flat head screw x29		
–	N32-3008-41	Flat head screw x2		
–	N35-3004-41	Binder screw x2		
–	N35-3006-41	Binder screw x6		
–	N35-3006-45	Binder screw x16		
–	N87-3006-41	Tap tight screw x48		
–	N87-4010-41	Tap tight screw x2		
–	X40-1080-02	VFO unit		☆
–	X40-1060-00	Switch unit		
–	X42-1050-00	DC power cord ass'y		
–	X42-1080-20	AC power cord ass'y	K	
–	X42-1070-60	AC power cord ass'y	W, T	
–	X43-1240-01	Rectifier unit		☆
–	X48-1130-00	MIX unit		
–	X48-1140-20	FM·IF unit	K	
–	X48-1140-61	FM·IF unit	W	
–	X48-1140-51	FM·IF unit	T	☆
–	X49-1060-00	AF unit		
–	X50-1410-11	HET unit	K	☆
–	X50-1410-61	HET unit	W, T	☆
–	X50-1420-00	CAR·VOX unit		☆
–	X52-1080-21	GENERATOR unit		
–	X54-1240-11	DISPLAY unit		☆
–	X54-1250-11	COUNTER unit	K	☆
–	X54-1250-61	COUNTER unit	W, T	☆
–	X55-1170-11	RX·NB unit	K	☆
–	X55-1170-00	RX·NB unit	W, T	☆
–	X56-1250-00	FINAL unit		☆

VFO UNIT (X40-1080-02)

Ref. No.	Parts No.	Description	Re-marks
		CAPACITOR	
C1	CC45CH1H180J	Ceramic 18pF ±5% (BLK)	
C2	CC45CH1H220J	Ceramic 22pF ±5% (BLK)	
C3	CC45PG1H390J	Ceramic 39pF ±5% (ORG)	
C4	CC45PG1H220J	Ceramic 22pF ±5% (ORG)	
C5	CC45LH1H220J	Ceramic 22pF ±5% (RED)	
C6, 7	CM93F2A101J	Super mica 100pF ±5%	
C8	CC45CH1H030D	Ceramic 3pF ±0.5pF(BLK)	
C9	CK45E1H223P	Ceramic 0.022μF +100%, –0%	
C10,11	CK45F1H473Z	Ceramic 0.047μF +80%, –20%	
C12	CC45CH1H180J	Ceramic 18pF ±5% (BLK)	
C13	CK45F1H473Z	Ceramic 0.047μF +80%, –20%	
C14	CC45CH1H180J	Ceramic 18pF ±5% (BLK)	
C15	CC45CH1H220J	Ceramic 22pF ±5% (BLK)	
C16	CK45E1H103P	Ceramic 0.01μF +100%, –0%	
C17	CK45F1H473Z	Ceramic 0.047μF +80%, –20%	
C18	CC45SL1H470J	Ceramic 47pF ±5%	
C19	CC45SL1H101J	Ceramic 100pF ±5%	
C20	CC45SL1H470J	Ceramic 47pF ±5%	
		RESISTOR	
R1~11	RD14CY2E000J	Carbon 000Ω ±5% 1/4W	
		SEMICONDUCTOR	
Q1, 2	V09-0020-05	FET 3SK22 (Y)	
Q3, 4	V03-0079-05	Transistor 2SC460(B)	
D1, 2	V11-0051-05	Diode 1N60	
		VC/TRIMMER	
VC1	C01-0177-05	Vriable capacitor	
TC1	C03-0001-05	Variable capacitor (midget)	
TC2	C05-0013-15	Ceramic trimmer 20pF	
		COIL/INDUCTOR	
L1	L32-0166-05	OSC coil	
L2, 3	L40-1021-03	Ferri-inductor 1mH	
L4	L40-2201-03	Ferri-inductor 22μH	
L5, 6	L40-1021-03	Ferri-inductor 1mH	
L7, 8	L40-4791-02	Ferri-inductor 4.7μH	
		MISCELLANEOUS	
–	D22-0011-05	Shaft coupling	
–	D40-0601-05	Dial mechanism	☆
–	E08-0204-05	2P connector jack	
–	E13-0101-05	1P phon jack	
–	E22-0207-05	Lug terminal	
–	E23-0015-04	Lug terminal x2	
–	E23-0046-04	Lapping terminal x4	
–	G03-0009-04	Spring	
–	N10-2040-11	Nut 4φ	
–	N15-1040-11	Washer x2 4φ	
–	N16-0030-41	Spring washer x4 3φ	
–	N17-1030-31	Lock washer x8 3φ	
–	N17-1040-41	Lock washer 4φ	
–	N30-2006-11	Round head screw x3	
–	N30-3004-11	Round head screw x3	
–	N30-3006-11	Round head screw x17	
–	N30-4014-11	Round head screw	
–	N32-3006-11	Flat head screw x4	
–	N32-3008-11	Flat head screw x4	
–	N87-3006-46	Tapping screw	

SWITCH UNIT (X41-1060-00)

Ref. No.	Parts No.	Description	Re-marks
S2~6	S36-2026-15	Lever switch	
–	E23-0046-04	Terminal x5	
–	E23-0047-04	Terminal x14	

PARTS LIST

DC POOWER CORD ASS'Y (X42-1050-00)

Ref. No.	Parts No.	Description	Remarks
–	E09-0426-05	4P plug (sqare)	
–	F05-5022-05	Fuse (5A)	
–	J13-0029-05	Fuse holder	
–	J41-0006-00	Cord bushing	

AC POWER CORD ASS'Y (X42-1080-20) K type

Ref. No.	Parts No.	Description	Remarks
–	E09-0426-05	4P plug (square)	
–	E30-0181-05	AC cord with plug	
–	J41-0006-00	Cord bushing	

AC POWER CORD ASS'Y (X42-1070-60) W, T type

Ref. No.	Parts No.	Description	Remarks
–	E03-0301-15	Plug	
–	E09-0426-05	4P plug (square)	
–	J61-0014-05	Free up belt	

RECTIFIER UNIT (X43-1240-01)

Ref. No.	Parts No.	Description	Remarks
		CAPACITOR	
C1, 2	CE02W1E472	Electrolytic 4700μF 25WV	
C3	CE04W1HR47	Electrolytic 0.47μF 50WV	
C4	CE04W1C100	Electrolytic 10μF 16WV	
C5	CE04W1HR47	Electrolytic 0.47μF 50WV	
C6	CE04W1V4R7	Electrolytic 4.7μF 35WV	
C7	CE02W1E222	Electrolytic 2200μF 25WV	
C8	CE04W1V4R7	Electrolytic 4.7μF 35WV	
C9	CE02W1V222	Electrolytic 2200μF 35WV	
C10	CE04W1H010	Electrolytic 1μF 50WV	
C11	CE02W1V102	Electrolytic 1000μF 35WV	
C12	CE04W1C471	Electrolytic 470μF 16WV	
C13	CK45F1H473Z	Ceramic 0.047μF +80%,–20%	
C14	CC45SL1H391J	Ceramic 390pF ±5%	
C15	CE04W1V4R7	Electrolytic 4.7μF 35WV	
C16	CE02W1C102	Electrolytic 1000μF 16WV	
C17	CC45SL1H101J	Ceramic 100pF ±5%	
C18	CE04W1H330	Electrolytic 33μF 50WV	
C19,20	CH45F1H223Z	Ceramic 0.022μF +80%,–20%	
C21	CQ92M1H103K	Mylar 0.01μF ±10%	
C22	CS15E1VR33M	Tantalum 0.33μF 35WV	
C23	CE04W1H100	Electrolytic 10μF 50WV	
C24	CK45F1H223Z	Ceramic 0.022μF +80%,–20%	
C25	CE04W1E100	Electrolytic 10μF 25WV	
C26	CE04W1A470	Electrolytic 47μF 10WV	
C27	CE04W1A101	Electrolytic 100μF 10WV	
C30	CK45F1H103Z	Ceramic 0.01μF +80%,–20%	
CK1~12	C91-0403-05	Ceramic	
CK13~17	C91-0405-05	Ceramic	☆
		RESISTOR	
R1~33	RD14CY2E000J	Carbon 000Ω ±5% 1/4W	
R14	R92-0041-25	Cement 0.47Ω 2W	
R17	Missing No.		

Ref. No.	Parts No.	Description
		SEMICONDUCTOR
Q1~3	V03-0126-05	Transistor 2SC734(Y)
Q4	V04-0046-05	Transistor 2SD235(Y)
Q5	V02-0040-05	Transistor 2SB405(R)
Q6	V01-0138-05	Transistor 2SA671TD
Q7, 8	V03-0126-05	Transistor 2SC734(Y)
Q9	V01-0037-05	Transistor 2SA495 (O
Q10	V03-0126-05	Transistor 2SC734(Y)
Q11	V30-0218-05	IC MC1723CL
Q12	V04-0046-05	Transistor 2SD235(Y)
Q13	V01-0037-05	Transistor 2SA495(O
Q14,15	V03-0405-05	Transistor 2SC945(P)
D1	V11-0223-05	Rectifier stack DS-10B
D2, 3	V11-0270-05	Diode U05B
D4, 5	V11-0219-05	Diode V06B
D6	V11-0243-05	Zener diode WZ-061
D7	V11-0219-05	Diode V06B
D8	V11-0076-05	Diode 1S1555
D9	V11-0051-05	Diode 1N60
D10	V11-0076-05	Diode 1S1555
D11	V11-0287-05	Zener diode BZ-240
D12	V11-0243-05	Zener diode WZ-061
		POTENTIOMETER/COIL
VR1, 2	R12-2014-05	Semi-fixed resistor 5kΩ (
L1	L40-1545-06	Ferri-inductor 150m
L2	L33-0220-05	Choke coil 2.4μH
T1	L19-0301-05	Converter transformer
		MISCELLANEOUS
–	E23-0047-04	Terminal x19
–	E23-0048-04	Terminal x5
–	F11-0194-23	Rectifier shield case
–	F20-0078-05	Insulating mica x2
–	N10-2030-11	Nut x5
–	N19-0201-05	Washer x2
–	N30-3004-11	Round head screw
–	N30-3006-11	Round head screw x4
–	N30-3010-11	Round head screw x3
–	N30-3012-11	Round head screw x2
–	N87-3006-41	Tap tight screw x2

MIX UNIT (X48-1130-00)

Ref. No.	Parts No.	Description
		CAPACITOR
C1~3	CK45D1H102M	Ceramic 1000pF ±20%
C4, 5	CC45SL1H030C	Ceramic 3pF ±0.25p
C6, 7	CK45D1H102M	Ceramic 1000pF ±20%
C8, 9	CK45F1H103Z	Ceramic 0.01μF +80%,
C10~15	CK45D1H102M	Ceramic 1000pF ±20%
C16	Missing No.	
C17	CC45SL1HR5C	Ceramic 0.5pF ±0.25p
C18,19	CC45SL1H010C	Ceramic 1pF ±0.25p
C20	CK45D1H102M	Ceramic 1000pF ±20%
C21,22	CC45SL1H0R5C	Ceramic 0.5pF ±0.25p
C23	CC45SL1H020C	Ceramic 2pF ±0.25p
C24	CK45D1H102M	Ceramic 1000pF ±20%

PARTS LIST

Ref. No.	Parts No.	Description	Re-marks
C25	CC45SL1H101J	Ceramic 100pF ±5%	
C26~29	CK45D1H102M	Ceramic 1000pF ±20%	
C30	CE04W1H4R7	Electrolytic 4.7μF 50WV	
C31	CK45F1H103Z	Ceramic 0.01μF +80%,-20%	
C32~34	CK45D1H102M	Ceramic 1000pF ±20%	
C35	CE04W1HR47	Electrolytic 0.47μF 50WV	
C36	CE04W1C100	Electrolytic 10μF 16WV	
C37	CK45F1H103Z	Ceramic 0.01μF +80%,-20%	
C38	CK45D1H102M	Ceramic 1000pF ±20%	
C39	CE04W1H4R7	Electrolytic 4.7μF 50WV	
C40	CK45F1H103Z	Ceramic 0.01μF +80%,-20%	
C41	CC45SL1H150J	Ceramic 15pF ±5%	
C42	CK45D1H102M	Ceramic 1000pF ±20%	
C43	CC45SL1H050C	Ceramic 5pF ±0.25pF	
C44	CE04W1C100	Electrolytic 10μF 16WV	
C45~47	CK45D1H102M	Ceramic 1000pF ±20%	
C48	Missing No.		
C49	CK45D1H102M	Ceramic 1000pF ±20%	
C50	CK45F1H103Z	Ceramic 0.01μF +80%,-20%	
C51,52	CK45D1H102M	Ceramic 1000pF ±20%	
C53	CK45F1H103Z	Ceramic 0.01μF +80%,-20%	
C54	CC45SL1H0R5C	Ceramic 0.5pF ±0.25pF	
C55	CC45SL1H030C	Ceramic 3pF ±0.25pF	
RESISTOR			
R1~26	RD14CY2E000J	Carbon 000Ω ±5% 1/4W	
POTENTIOMETER/TRIMMER			
VR1	R12-0042-05	Semi-fixed resistor 500Ω (B)	
VR2	R12-2015-05	Semi-fixed resistor 5kΩ (B)	
TC1~3	C05-0013-15	Ceramic trimmer 20pF	
TC4	C05-0015-15	Ceramic trimmer 40pF	
SEMICONDUCTOR			
Q1~3	V09-0057-05	FET 3SK41 (L or M) or 3SK40 (L or M)	
Q4	V03-0168-05	Transistor 2SC998	
Q5	V03-0123-05	Transistor 2SC733(Y)	
Q6	V03-0053-05	Transistor 2SC388A	
D1	V11-0317-05	Diode 1S2208	
D2	V11-0076-05	Diode 1S1555	
D3~6	V11-0317-05	Diode 1S2208	
D7	V11-0076-05	Diode 1S1555	
D8, 9	V11-0051-05	Diode 1N60	
COIL/INDUCTOR/IFT			
L1	L33-0220-05	Choke coil 2.4μH	
L2	L40-1001-03	Ferri-inductor 10μH	
L3	L34-0353-05	VHF coil	
L4	L34-0442-05	VHF coil	
L5	L40-1001-03	Ferri-inductor	
L6	L34-0448-05	VHF coil	
L7	L34-0352-05	VHF coil	
L8	L40-1001-03	Ferri-inductor 10μH	
T1	L34-0516-05	Tuning coil 133MHz	
T2	L30-0264-05	IFT 10.7MHz	
T3	L31-0321-05	IFT 144MHz	
T4	L31-0322-05	Tuning coil 144MHz	
T5	L31-0266-05	IFT 144MHz	
T6	L31-0323-05	Tuning coil 144MHz	
MISCELLANEOUS			
–	E23-0047-04	Terminal x14	
–	F02-0004-05	Cooler	

FM-IF UNIT (X48-1140-20 K type, -61 W type, -51 T type)

Ref. No.	Parts No.	Description	Re-marks
CAPACITOR			
C1	CC45SL1H100D	Ceramic 10pF ±0.25pF	
C2, 3	CK45F1H103Z	Ceramic 0.01μF +80%,-20%	
C4	CC45SL1H101J	Ceramic 100pF ±5%	
C5, 6	CK45F1H473Z	Ceramic 0.047μF +80%,-20%	
C7	CK45F1H103Z	Ceramic 0.01μF +80%,-20%	
C8	CM93D1H151J	Super mica 150pF ±5%	
C9	CM93D1H681J	Super mica 680pF ±5%	
C10	CC45SL1H221J	Ceramic 220pF ±5%	
C11	CE04W1H4R7	Electrolytic 4.7μF 50WV	
C12	CK45D1H102M	Ceramic 1000pF ±20%	
C13	CC45SL1H470J	Ceramic 47pF ±5%	
C14	CK45F1H103Z	Ceramic 0.01μF +80%,-20%	
C15	CK45D1H102M	Ceramic 1000pF ±20%	
C16	CK45F1H103Z	Ceramic 0.01μF +80%,-20%	
C17	CE04W1C100	Electrolytic 10μF 16WV	
C18	CK45F1H103Z	Ceramic 0.01μF +80%,-20%	
C19	CE04W1C100	Electrolytic 10μF 16WV	
C20	CC45SL1H101J	Ceramic 100pF ±5%	
C21	CK45F1H103Z	Ceramic 0.01μF +80%,-20%	
C22	CE04W1C100	Electrolytic 10μF 16WV	
C23	CE04W1H4R7	Electrolytic 4.7μF 50WV	
C24	CK45F1H103Z	Ceramic 0.01μF +80%,-20%	
C25,26	CK45F1H223Z	Ceramic 0.022μF +80%,-20%	
C27	CE04W1C470	Electrolytic 47μF 16WV K, T	
C28	CK45F1H103Z	Ceramic 0.01μF +80%,-20% K,T	
C29	CE04W1V4R7	Electrolytic 4.7μF 35WV	
C30	CQ92M1H222K	Mylar 2200pF ±10%	
C31	CQ92M1H102K	Mylar 1000pF ±10%	
C32	CQ92M1H332K	Mylar 3300pF ±10%	
C33	CE04W1C100	Electrolytic 10μF 16WV	
C34	CE04W1E220	Electrolytic 22μF 25WV	
C35	CK45F1H473Z	Ceramic 0.047μF +80%,-20%	
C36	CC45SL1H101J	Ceramic 100pF ±5%	
C37	CK45F1H103Z	Ceramic 0.01μF +80%,-20%	
C38	CK45D1H102M	Ceramic 1000pF ±20%	
C39	CQ92M1H223K	Mylar 0.022μF ±10%	
C40	CK45D1H102M	Ceramic 1000pF ±20%	
C41	CC45SL1H221J	Ceramic 220pF ±5%	
C42	CE04W1C100	Electrolytic 10μF 16WV	
C43	CC45SL1H331J	Ceramic 330pF ±5%	
C44	CE04W1HR47	Electrolytic 0.47μF 50WV	
C45	CK45D1H102M	Ceramic 1000pF ±20%	
C46	CE04W1H010	Electrolytic 1μF 50WV	
C47	Missing No.		
C48	CQ92M1H393K	Mylar 0.039μF ±10%	
C49	CE04W1H010	Electrolytic 1μF 50WV	
C50	CE04W1C100	Electrolytic 10μF 16WV	
C51	CE04W1H4R7	Electrolytic 4.7μF 50WV	
C52,53	CK45D1H102M	Ceramic 1000pF ±20% K, T	
C54	CC45SL1H331J	Ceramic 330pF ±5%	
RESISTOR			
R1~57	RD14CY2E000J	Carbon 000Ω ±5% 1/4W	
R26~28	Missing No.	W	
SEMICONDUCTOR			
Q1~3	V03-0079-05	Transistor 2SC460(B)	
Q4~6	V03-0093-05	Transistor 2SC458(B)	
Q7	V03-0079-05	Transistor 2SC460(B)	
Q8, 9	V03-0123-05	Transistor 2SC733(Y) K, T	
Q10	V01-0032-05	Transistor 2SA562(Y) K, T	
Q11~14	V03-0123-05	Transistor 2SC733(Y)	
Q15	V03-0093-05	Transistor 2SC458(B)	
Q16,17	V03-0123-05	Transistor 2SC733(Y)	
D1, 2	V11-0051-05	Diode 1N60	
D3~6	V11-0076-05	Diode 1S1555	
D7, 8	V11-0051-05	Diode 1N60	
D9,10	V11-0076-05	Diode 1S1555	

TS-700S

PARTS LIST

Ref. No.	Parts No.	Description	Remarks
D11,12	V11-0076-05	Diode 1S1555 K, T	
D13	V11-0243-05	Zener diode WZ-061 K, T	
D14	V11-0076-05	Diode 1S1555	
POTENTIOMETER			
VR1	R12-5016-05	Semi-fixed resistor 100KΩ (B)	
VR2	R12-7013-05	Semi-fixed resistor 500KΩ (B)	
COIL/FILTER/CRYSTAL			
L1	L40-1045-06	Ferri-inductor 100mH	
L2	L40-6825-04	Ferri-inductor 6.8mH	
L3	L40-1001-03	Ferri-inductor 10μH	
T1, 2	L30-0199-05	IFT 455kHz	
T3	L30-0006-05	Descrete coil (D)	
T4	L30-0007-05	Descrete coil (E)	
CF1	L72-0014-05	Ceramic filter SFE-10.7MA	
CF2	L72-0037-05	Ceramic filter CFR-455F	
X1	L77-0327-05	Crystal oscillator 10.245MHz	
–	L79-0034-05	Piezo-electric tuning fork 1750Hz W, T	☆
MISCELLANEOUS			
–	E18-0307-15	Socket	
–	E23-0047-04	Terminal x18 K, T	
–	E23-0047-04	Terminal x16 W	
–	F29-0014-05	Insulating washer	
–	N10-2030-11	Hex. nut	
–	N17-1030-41	Lock washer	
–	N30-3010-46	Round head screw	

Ref. No.	Parts No.	Description	Remarks
C31	CQ93M1H103K	Mylar 0.01μF ±10%	
C32	CK45D1H102M	Ceramic 1000pF ±20%	
C33	CK45F1H473Z	Ceramic 0.047μF +80%,-20%	
C34	CC45SL1H101K	Ceramic 100pF ±10%	
RESISTOR			
R1~38	RD14CY2E000J	Carbon 000Ω ±5% 1/4W	
R33,34	R92-0144-05	Metalized film 1Ω 2W	
SEMICONDUCTOR			
Q1~3	V03-0123-05	Transistor 2SC733(Y)	
Q4	V03-0126-05	Transistor 2SC734(Y)	
Q5	V03-0332-05	Transistor 2SC1061(B)	
Q6	V01-0138-05	Transistor 2SA671TD(A)	
D1~6	V11-0076-05	Diode 1S1555	
D7	V11-0319-05	Diode M8513A(O)	
TH1	V22-0008-05	Thermistor SDT-06	
COIL/INDUCTOR			
L1	L33-0025-05	Choke coil 1μH	
L3	L40-1092-03	Ferri-inductor 1μH	
MISCELLANEOUS			
–	E23-0047-04	Terminal x19	
–	F01-0161-04	Heatsink	
–	N10-2030-11	Nut x3 3φ	
–	N30-3008-11	Round head screw x2	
–	N30-3010-11	Round head screw	

AF UNIT (X49-1060-00)

Ref. No.	Parts No.	Description	Remarks
CAPACITOR			
C1	CE04W1H010	Electrolytic 1μF 50WV	
C2	CE04W1V4R7	Electrolytic 4.7μF 35WV	
C3	CE04W1H010	Electrolytic 1μF 50WV	
C4	CE04W1V4R7	Electrolytic 4.7μF 35WV	
C5	CE04W1H010	Electrolytic 1μF 50WV	
C6	CE04W1V4R7	Electrolytic 4.7μF 35WV	
C7	CE04W1HR47	Electrolytic 0.47μF 50WV	
C8	CQ93M1H332K	Mylar 3300pF ±10%	
C9	CQ93M1H333K	Mylar 0.033μF ±10%	
C10	CQ93M1H153K	Mylar 0.015μF ±10%	
C11	CQ93M1H473K	Mylar 0.047μF ±10%	
C12	CC45SL1H391K	Ceramic 390pF ±10%	
C13	CE04W1H4R7	Electrolytic 4.7μF 50WV	
C14,15	CE04W1C100	Electrolytic 10μF 16WV	
C16	CE04W1C470	Electrolytic 47μF 16WV	
C17	CE04W1V4R7	Electrolytic 4.7μF 35WV	
C18	CQ93M1H103K	Mylar 0.01μF ±10%	
C20	CE04W1E100	Electrolytic 10μF 25WV	
C21	CC45SL1H471K	Ceramic 470pF ±10%	
C22	CE04W1C470	Electrolytic 47μF 16WV	
C23	CE04W1C101	Electrolytic 100μF 16WV	
C24	CE04W1C330	Electrolytic 33μF 16WV	
C25	CE04W1E221	Electrolytic 220μF 25WV	
C26,27	CK45F1H473Z	Ceramic 0.047μF +80%,-20%	
C28	CE04W1C330	Electrolytic 33μF 16WV	
C29	CK45F1H473Z	Ceramic 0.047μF +80%,-20%	
C30	CK45F1H473Z	Ceramic 0.047μF +80%,-20%	

HET UNIT (X50-1410-11) K type (X50-1410-61) W, T type

Ref. No.	Parts No.	Description	Remarks
CAPACITOR			
C1~3	CK45D1H102M	Ceramic 1000pF ±20%	
C4~6	CK45D1H102M	Ceramic 1000pF ±20% K	
C7~17	CC45SL1H330J	Ceramic 33pF ±5%	
C18	CK45D1H102M	Ceramic 1000pF ±20%	
C19	CC45SL1H070D	Ceramic 7pF ±0.25pF	
C20,21	CK45D1H102M	Ceramic 1000pF ±20%	
C22	CC45SL1H330J	Ceramic 33pF ±5%	
C23	CC45SL1H470J	Ceramic 47pF ±5%	
C24	CK45D1H102M	Ceramic 1000pF ±20%	
C25	CC45PH1H030C	Ceramic 3pF ±0.25pF K	
C25	CC45PH1H100D	Ceramic 10pF ±0.5pF W, T	
C26	CC45SL1H0R5C	Ceramic 0.5pF ±0.25pF	
C27	CC45PH1H030C	Ceramic 3pF ±0.25pF K	
C27	CC45PH1H100D	Ceramic 10pF ±0.5pF W, T	
C28,29	Missing No.		
C30	CK45D1H102M	Ceramic 1000pF ±20%	
C31	CC45SL1H150J	Ceramic 15pF ±5%	
C32, 33	CC45SL1H101J	Ceramic 100pF ±5%	
C34~38	CK45D1H102M	Ceramic 1000pF ±20%	
C39	CC45PH1H030C	Ceramic 3pF ±0.25pF K	
C39	CC45SH1H100D	Ceramic 10pF ±0.5pF W, T	
C40	CC45CH1H030C	Ceramic 3pF ±0.25pF	
C41,42	CK45D1H102M	Ceramic 1000pF ±20%	
C43	CC45SH1H030C	Ceramic 3pF ±0.25pF K	
C43	CC45UJ1H050D	Ceramic 5pF ±0.5pF W, T	
C44	CC45CH1H150J	Ceramic 15pF ±5%	
C45	CK45D1H102M	Ceramic 1000pF ±20%	

PARTS LIST

Ref. No.	Parts No.	Description			Remarks
C46	CC45SL1H101J	Ceramic	100pF	±5%	
C47	CK45D1H102M	Ceramic	1000pF	±20% K	
C47	CC45UJ1H070D	Ceramic	7pF	±0.5pF W, T	
C48~51	CK45D1H102M	Ceramic	1000pF	±20%	
C52	CE04W1C220	Electrolytic	22μF	16WV	
C53	CK45D1H102M	Ceramic	1000pF	±20%	
C54	CC45SL1H221J	Ceramic	220pF	±5%	
C55	CK45F1H103Z	Ceramic	0.01μF	+80%, −20%	
C56	CC45SL1H221J	Ceramic	220pF	±5%	
C57	CK45F1H103Z	Ceramic	0.01μF	+80%, −20%	
C58	CC45SL1H390J	Ceramic	39pF	±5%	
C59	CK45F1H103Z	Ceramic	0.01μF	+80%, −20%	
C60	CK45D1H102M	Ceramic	1000pF	±20%	
C61,62	CK45F1H103Z	Ceramic	0.01μF	+80%, −20%	
C63	CC45SL1H470J	Ceramic	47pF	±5%	
C64	CC45SL1H101J	Ceramic	100pF	±5%	
C65	CC45SL1H470J	Ceramic	47pF	±5%	
C66	CK45F1H103Z	Ceramic	0.01μF	+80% −20%	
C67	CC45SL1H100D	Ceramic	10pF	±0.5pF	
C68	CK45D1H102M	Ceramic	1000pF	±20%	
C69	CK45F1H103Z	Ceramic	0.01μF	+80%, −20%	
C70	Missing No.				
C71,72	CK45D1H102M	Ceramic	1000pF	±20%	
C73	CK45F1H103Z	Ceramic	0.01μF	+80%,−20%	
C74	CC45CH1H010C	Ceramic	1pF	±0.25pF	
C75	CK45F1H103Z	Ceramic	0.01μF	+80%, −20%	
C76	CC45PH1H030C	Ceramic	3pF	±0.25pF K	
C76	CC45PH1H070D	Ceramic	7pF	±0.5pF W, T	
C77,78	CK45D1H102M	Ceramic	1000pF	±20% K	
C77,78	Missing No.			W, T	
C79	CK45F1H103Z	Ceramic	0.01μF	+80%, −20%	
C100	CC45SL1H010C	Ceramic	1pF	±0.25pF	
RESISTOR					
R1~80 R4~6 32~34 43,44 52,77 78	RD14CY2B000J	Carbon	000Ω	±5% 1/8W	
	Missing No.			W, T	
SEMICONDUCTOR					
Q1	V03-0053-05	Transistor	2SC388A		
Q2	V03-0079-05	Transistor	2SC460(B)		
Q3	V30-0153-05	IC	SN76514N		
Q4	V09-0057-05	FET	3SK41(L) or 3SK40(L)		
Q5~7	V03-0093-05	Transistor	2SC458(B)		
Q8	V03-0079-05	Transistor	2SC460(B)		
Q9	V03-0123-05	Transistor	2SC733(Y)		
D1	V11-0370-05	Diode	1S1587	K	
D1	V11-0076-05	Diode	1S1555	W,	
D2	Missing No.			K	
D2	V11-0076-05	Diode	1S1555	W, T	
D3~23	V11-0076-05	Diode	1S1555		
D7~12	Missing No.	W, T		W, T	
D24~28	V11-0317-05	Diode	1S2208		
D25,26 28	Missing No.			W, T	
D29,30	V11-0076-05	Diode	1S1555		
D31~33	V11-0051-05	Diode	1N60		
D34,35	V11-0317-05	Diode	1S2208	K	
D34,35	Missing No.			W, T	
D36,37	Missing No.				
D38	V11-0076-05	Diode	1S1555		
POTENTIOMETER/TRIMMER/RELAY					
VR1	R12-2015-05	Semi-fixed resistor 5kΩ (B)			
TC1~12	C05-0030-15	Ceramic trimmer 20pF			
RL1	S51-1404-05	Relay			☆

Ref. No.	Parts No.	Description			Remarks
COIL/INDUCTOR/IFT					
L1~7	L34-0437-05	OSC coil			
L4~6	Missing No.			W, T	
L8	L40-1021-03	Ferri-inductor	1mH		
L9	L33-0025-05	Choke coil	1μH		
L10	L40-1021-03	Ferri-inductor	1mH		
L11	L40-6891-02	Ferri-inductor	6.8μH		
L12	L40-1021-03	Ferri-inductor	1mH		
L13,14	L40-4791-02	Ferri-inductor	4.7μH		
L15	L40-1091-03	Ferri-inductor	1μH		
T1~3	L31-0180-05	IFT	144MHz		
T4	L34-0517-05	Tuning coil			
T5	L34-0516-05	Tuning coil			
T6	L34-0612-05	Tuning coil			☆
MISCELLANEOUS					
—	E18-0201-05	1P crystal socket x3		W, T	
—	E18-0601-05	6P crystal socket		K	
—	E18-2401-05	12P crystal socket			
—	E23-0047-04	Terminal x16			
—	E40-0613-05	Mini-connector water			
—	E40-1213-05	Mini-connector water			
—	F10-0384-04	Shield plate			

CAR · VOX UNIT (X50-1420-00)

Ref. No.	Parts No.	Description			Remarks
CAPACITOR					
C1	CK45F1H103Z	Ceramic	0.01μF	+80%, −20%	
C2	CE04W1A470	Electrolytic	47μF	10WV	
C3	CK45F1H473Z	Ceramic	0.047μF	+80%, −20%	
C4	CK45F1H223Z	Ceramic	0.022μF	+80%, −24%	
C5	CE04W1H3R3	Electrolytic	3.3μF	50WV	
C6	CE04W1H010	Electrolytic	1μF	50WV	
C7	CC45SL1H331J	Ceramic	330pF	±5%	
C8	CE04W1C100	Electrolytic	10μF	16WV	
C9	CK45D1H472M	Ceramic	4700pF	±20%	
C10	CK45F1H473Z	Ceramic	0.047μF	+80%, −20%	
C11	CE04W1H3R3	Electrolytic	3.3μF	50WV	
C12	CK45F1H103Z	Ceramic	0.01μF	+80%, −20%	
C13	CE04W1H3R3	Electrolytic	3.3μF	50WV	
C14	CE04W1C100	Electrolytic	10μF	16WV	
C15	CQ92M1H123K	Mylar	0.012μF	±10%	
C16,17	CQ92M1H223K	Mylar	0.022μF	±10%	
C18	CQ92M1H123K	Mylar	0.012μF	±10%	
C19	CQ92M1H682K	Mylar	6800pF	±10%	
C20	CK45D1H102M	Ceramic	100pF	±20%	
C21	CC45TH1H330J	Ceramic	33pF	±5%	
C22	CC45TH1H220J	Ceramic	22pF	±5%	
C23	CC45SL1H330J	Ceramic	33pF	±5%	
C24	CK45D1H102M	Ceramic	1000pF	±20%	
C25,26	CC45SL1H221J	Ceramic	220pF	±5%	
C27	CC45SL1H050D	Ceramic	5pF	±0.5pF	
C28	CC45SL1H330J	Ceramic	33pF	±5%	
C29	CK45F1H473Z	Ceramic	0.04μF	+80%, −20%	
C30	CK45F1H103Z	Ceramic	0.01μF	+80%, −20%	
C31	CK45F1H473Z	Ceramic	0.047μF	+80%, −20%	
C32	CK45D1H102M	Ceramic	1000pF	±20%	
RESISTOR					
R1~42	RD14CY2B000J	Carbon	000Ω	±5% 1/8W	
R18	RD14CY2E4R7J	Carbon	4.7Ω	±5% 1/4W	
R19	RD14CY2E105J	Carbon	1MΩ	±5% 1/4W	

PARTS LIST

Ref. No.	Parts No.	Description		Remarks
SEMICONDUCTOR				
Q1,2	V03-0123-05	Transistor	2SC733(Y)	
Q3	V03-0355-05	Transistor	2SC1000(GR)	
Q4	V03-0123-05	Transistor	2SC733(Y)	
Q5	V01-0032-05	Transistor	2SC733(Y)	
Q6,7	V03-0123-05	Transistor	2SC733(Y)	
Q8	V01-0032-05	Transistor	2SA562(Y)	
Q9	V03-0123-05	Transistor	2SC733(Y)	
Q10	V03-0079-05	Transistor	2SC460(B)	
Q11,12	V03-0123-05	Transistor	2SC733(Y)	
D1~4	V11-0051-05	Diode	1N60	
D5	V11-0076-05	Diode	1S1555	
D6~8	V11-0051-05	Diode	1N60	
D9~16	V11-0076-05	Diode	1S1555	
TRIMMER				
TC1, 2	C05-0013-15	Ceramic trimmer	20pF	
TC3	C05-0015-015	Ceramic trimmer	40pF	
INDUCTOR/TRANSFORMER/IFT				
L1~6	L40-1021-03	Ferri-inductor	1mH	
T1	L13-0001-05	Input transformer	500Ω : 20kΩ	
T2	L30-0265-05	IFT	10.7MHz	
CRYSTAL				
X1	L77-0355-05	Crystal oscillator	10.6985MHz	
X2	L77-0356-05	Crystal oscillator	10.7015MHz	
MISCELLANEOUS				
–	E23-0047-04	Terminal x31		

GENERATOR UNIT (X52-1080-21)

Ref. No.	Parts No.	Description			Remarks
CAPACITOR					
C1	CC45SL1H101J	Ceramic	100pF	±5%	
C2	CQ92M1H223K	Mylar	0.022μF	±10%	
C3	C90-0076-05	Tantalum	0.1μF	25WV	
C4	CE04W1A470	Electrolytic	47μF	10WV	
C5	CE04W1H010	Electrolytic	1μF	50WV	
C6	CQ92M1H103K	Mylar	0.01μF	±10%	
C7	CE04W1C100	Electrolytic	10μF	16WV	
C8	CQ92M1H223K	Mylar	0.022μF	±10%	
C9	CE04W1A470	Electrolytic	47μF	10WV	
C10	CQ92M1H102K	Mylar	1000pF	±10%	
C11	CE04W1H010	Electrolytic	1μF	50WV	
C12,13	CE04W1C100	Electrolytic	10μF	16WV	
C14	CQ92M1H472K	Mylar	4700pF	±10%	
C15	CE04W1A470	Electrolytic	47μF	10WV	
C16	CK45F1H103Z	Ceramic	0.01μF	+80%, –20%	
C17,18	CE04W1A470	Electrolytic	47μF	10W	
C19,20	CE04W1H010	Electrolytic	1μF	50WV	
C21	CQ92M1H103K	Mylar	0.01μF	±10%	
C22	CQ92M1H473K	Mylar	0.047μF	±10%	
C23	CE04W1H010	Electrolytic	1μF	50WV	
C24	CC45CH1H330J	Ceramic	33pF	±5%	
C25	CC45UJ1H050D	Ceramic	5pF	±0.5pF	
C26	CC45SL1H221J	Ceramic	220pF	±5%	
C27	CK45F1H103Z	Ceramic	0.01μF	+80%, –20%	
C28	CC45SL1H221J	Ceramic	220pF	±5%	
C29	CK45F1H103Z	Ceramic	0.01μF	+80%, –20%	
C30	CC45SL1H050D	Ceramic	5pF	±0.5pF	
C31~36	CK45F1H103Z	Ceramic	0.01μF	+80%,–20%	
C37,38	CE04W1H4R7	Electrolytic	4.7μF	50WV	
C39	CK45D1H102M	Ceramic	100pF	±20%	
C40	C91-0013-05	Ceramic	0.01μF	50WV	
C41	CC45CH1H150J	Ceramic	15pF	±5%	
C42	CC45CH1H100D	Ceramic	10pF	±0.5pF	
C43~45	CK45D1H102M	Ceramic	1000pF	±20%	
C46,47	CK45F1H473Z	Ceramic	0.047μF	+80%, –20%	
C48	CC45SL1H020C	Ceramic	2pF	±0.25pF	
C49	CK45D1H102M	Ceramic	1000pF	±20%	
C50,51	CK45F1H473Z	Ceramic	0.047μF	+80%, –20%	
C52	CK45F1H103Z	Ceramic	0.01μF	+80%, –20%	
C53	CC45SL1H220J	Ceramic	22pF	±5%	
C54	CK45F1H103Z	Ceramic	0.01μF	+80%, –20%	
C55	CE04W1H010	Electrolytic	1μF	50WV	
C56	CC45SL1H270J	Ceramic	27pF	±5%	
C57,58	CK45D1H102M	Ceramic	1000pF	±20%	
C59	CC45SL1H220J	Ceramic	22pF	±5%	
C60,61	Missing No.				
C62~64	CK45F1H103Z	Ceramic	0.01μF	50WV	
C65	CK45D1H102M	Ceramic	1000pF	±20%	
C66	CK45F1H103Z	Ceramic	0.01μF	50WV	
C67	CE04W1E330	Electrolytic	33μF	25WV	
C68	CK45F1H473Z	Ceramic	0.047μF	+80%, –20%	
C69	CE04W1H4R7	Electrolytic	4.7μF	50WV	
C70,71	CK45F1H103Z	Ceramic	0.01μF	+80%,–20%	
C72	CE04W1C100	Electrolytic	10μF	16WV	
C73	CC45SL1H270J	Ceramic	27pF	±5%	
C74	CC45SL1H101J	Ceramic	100pF	±5%	
C75	CK45D1H102M	Ceramic	1000pF	±20%	
C76	CQ92M1H104K	Mylar	0.01μF	±10%	
C77	C91-0013-05	Ceramic	0.01μF	50WV	
C78	Missing No.				
C79	CQ92M1H473K	Mylar	0.047μF	±10%	
C80	CK45F1H473Z	Ceramic	0.047μF	+80%, –20%	
C81	CC45SL1H470J	Ceramic	47pF	±5%	
C82	CK45F1H473Z	Ceramic	0.047μF	+80%,–20%	
C83	C91-0013-05	Ceramic	0.01μF	50WV	
C84	CC45SL1H070D	Ceramic	7pF	±0.5pF	
C85,86	CK45F1H473Z	Ceramic	0.047μF	+80%,–20%	
C87	CE04W1C101	Electrolytic	100μF	16WV	
C88,89	CC45SL1H100D	Ceramic	10pF	±0.5pF	
C90	CQ92M1H102K	Mylar	1000pF	±10%	
C91	CK45D1H102M	Ceramic	1000pF	±20%	
C92	CK45F1H473Z	Ceramic	0.047μF	+80%,–20%	
C93	CE04W1H010	Electrolytic	1μF	50WV	
C94	CK45D1H102M	Ceramic	1000pF	±20%	
C95	CE04W1H010	Electrolytic	1μF	50WV	
C96	CE04W1H4R7	Electrolytic	4.7μF	50WV	
C97	CE04W1H010	Electrolytic	1μF	50WV	
C98	CQ92M1H473K	Mylar	0.047μF	±10%	
C99	CC45SL1H470J	Ceramic	47pF	±5%	
C100	CC45SL1H221J	Ceramic	220pF	±5%	
C101	CE04W1H3R3	Electrolytic	3.3μF	50WV	
C102	CK45F1H473Z	Ceramic	0.047μF	+80%,–20%	
C103	CE04AW1H010M (EL)	Electrolytic	1μF	50WV	
C104	CK45F1H103Z	Ceramic	0.01μF	+80%,–20%	
C105	CE04W1H010	Electrolytic	1μF	50WV	
C106	C91-0013-05	Ceramic	0.01μF	50WV	
C107	CQ92M1H473K	Mylar	0.047μF	±10%	
C108	CQ92M1H223K	Mylar	0.022μF	±10%	
C109	CC45SL1H150J	Ceramic	15pF	±5%	
C110	CC45UJ1H220J	Ceramic	22pF	±5%	
RESISTOR					
R1~91	RD14CY2E000J	Carbon	000Ω	±5% 1/4W	
R43,, 42~55 90	Missing No.				
R88	RD14BY2E103J	Carbon	10kΩ	±5% 1/4W	
R89	RD14BY2E104J	Carbon	100kΩ	±5% 1/4W	

PARTS LIST

Ref. No.	Parts No.	Description	Remarks
SEMICONDUCTOR			
Q1,2	V03-0355-05	Transistor 2SC1000(GR)	
Q3	V03-0123-05	Transistor 2SC733(Y)	
Q4	V30-0039-05	IC TA7061AP	
Q5	V03-0079-05	Transistor 2SC460(B)	
Q6	V09-0057-05	FET 2SK41(L or M) or 3SK40(L or M)	
Q7,8	V03-0079-05	Transistor 2SC460(B)	
Q9	V09-0057-05	FET 3SK41(L or M) or 3SK40(L or M)	
Q11~13	V09-1002-26	FET 3SK35T(GR)	
Q14~16	V03-0123-05	Transistor 2SC733(Y)	
Q17	V99-0015-05	FET 2SK30(O)	
D1, 2	V11-0076-05	Diode 1S1555	
D3~6	V11-0051-05	Diode 1N60	
D7	V11-0076-05	Diode 1S1555	
D8~14	V11-0370-05	Diode 1S1587	
D15	V11-0317-05	Diode 1S2208	
D16~23	V11-0076-05	Diode 1S1555	
D24,25	V11-0051-05	Diode 1N60	
D26	V11-0076-05	Diode 1S1555	
D27,30	V11-0051-05	Diode 1N60	
D31	V11-0076-05	Diode 1S1555	
D32	V11-0200-05	Diode V06C	
POTENTIOMETER/TRIMMER			
VR1	R12-3025-05	Semi-fixed resistor 10kΩ (B)	
VR3	R12-2015-05	Semi-fixed resistor 5kΩ (B)	
VR4	R12-1016-05	Semi-fixed resistor 3kΩ (B)	
VR5	R12-3025-05	Semi-fixed resistor 10kΩ (B)	
VR6	R12-0054-05	Semi-fixed resistor 100Ω (B)	
VR7	R12-1020-05	Semi-fixed resistor 1kΩ (B)	
TC1, 2	C05-0030-15	Ceramic trimmer 20pF	
INDUCTOR/COIL/IFT			
L1	L40-1045-06	Ferri-inductor 100mH	
L2	L33-0264-05	Choke coil 30μH	☆
L3	L39-0069-05	Variable inductor 15μH	☆
L4	L33-0236-05	Choke coil 10μH	
L5, 6	L40-1021-03	Ferri-inductor 1mH	
L7	L40-1001-03	Ferri-inductor 10μH	
L8	L40-1021-03	Ferri-inductor 1mH	
L9	L40-1011-03	Ferri-inductor 100μH	
L10	L40-6801-03	Ferri-inductor 68μH	
L11	L40-1021-03	Ferri-inductor 1mH	
L12	L40-1011-03	Ferri-inductor 100μH	
L13~16	L40-1021-03	Ferri-inductor 1mH	
L17	L40-1011-03	Ferri-inductor 100μH	
L18	L40-1021-03	Ferri-inductor 1mH	
L19	L40-1091-03	Ferri-inductor 1μH	
L20	L40-1021-03	Ferri-inductor 1mH	
T1~6	L30-0264-05	IFT 10.7MHz	
CRYSTAL			
X1	L77-0735-05	Crystal oscillator 10.720MHz	☆
XF	L71-0022-05	Crystal filter 10.7MHz (61V)	
MISCELLANEOUS			
–	E23-0047-04	Terminal x 49	
–	F10-0330-04	Shield plate	
–	F10-0334-04	Shield plate (B)	
–	N10-2030-11	Nut x2	

DISPLAY UNIT (X54-1240-11)

Ref. No.	Parts No.	Description	Remarks
RESISTOR			
R1~3	RD14BY2B152J	Carbon 1.5kΩ ±5% 1/4W	
INDICATOR/LED			
V1	V40-7760-46	Fluor-indicator 9-ST-08	☆
D1~3	V11-0430-05	LED SEL-103W	
MISCELLANEOUS			
–	E31-0417-05	Connector with lead 8P	☆
–	E31-0418-05	Connector with lead 10P	☆
–	F12-0401-04	Shield tube (8φ)	
–	F15-0611-04	Indicator mask	☆
–	F20-0506-14	Insulating plate	☆
–	J19-1301-04	Diode holder	
–	212-0023-05	Insulating tube	

COUNTER UNIT (X54-1250-11) K type (X54-1250-61) W, T type

Ref. No.	Parts No.	Description	Remarks
CAPACITOR			
C1	CC45SL1H100D	Ceramic 10pF ±0.5pF	
C2	CC45SL1H220J	Ceramic 22pF ±5% K	
C2	CC45SL1H470J	Ceramic 47pF ±5% W,T	
C3	CC45SL1H220J	Ceramic 22pF ±5%	
C4	CK45D1H102M	Ceramic 1000pF ±20%	
C5	CK45F1H103Z	Ceramic 0.01μF +80%, –20%	
C6	CE04W1H010	Electrolytic 1μF 50WV	
C7~10	CK45F1H103Z	Ceramic 0.01μF +80%, –20%	
C11	CC45UJ1H470J	Ceramic 47pF ±5%	
C12	CK45F1H103Z	Ceramic 0.01μF +80%, –20%	
C13	CE04W1H010	Electrolytic 1μF 50WV	
C14	CK45F1H103Z	Ceramic 0.01μF +80%, –20%	
C15	CE04W1H010	Electrolytic 1μF 50WV	
C16	CC45UJ1H180J	Ceramic 18pF ±5%	
C17	CK45F1H103Z	Ceramic 0.01μF +80%, –20%	
C18	CC45UJ1H120J	Ceramic 12pF ±5%	
C19	CK45F1H103Z	Ceramic 0.01μF +80%, –20%	
C20	CC45UJ1H030C	Ceramic 3pF ±0.25pF	
C21	CK45F1H103Z	Ceramic 0.01μF +80%, –20%	
C22,23	CC45UJ1H221J	Ceramic 220pF ±5%	
C24	CC45SL1H220J	Ceramic 22pF ±5%	
C25,26	CK45F1H103Z	Ceramic 0.01μF +80%, –20%	
C27	CC45CH1H220J	Ceramic 22pF ±5%	
C28	CC45CH1H120J	Ceramic 12pF ±5%	
C29	CK45F1H103Z	Ceramic 0.01μF +80%, –20%	
C30	CQ92M1H223K	Mylar 0.022μF ±10%	
C31	CQ92M1H222K	Mylar 2200pF ±10%	
C32	CK45D1H102M	Ceramic 1000pF ±20%	
C33	CC45SL1H470J	Ceramic 47pF ±5%	
C34	CK45F1H103Z	Ceramic 0.01μF +80%, –20%	
C35	CC45SL1H220J	Ceramic 22pF ±5%	
C36	CK45D1H102M	Ceramic 1000pF ±20%	
C37,38	CC45SL1H101J	Ceramic 100pF ±5%	
C39	CK45D1H102M	Ceramic 1000pF ±20%	
C40	CC45UJ1H180J	Ceramic 18pF ±5%	
C41,42	CK45D1H102M	Ceramic 1000pF ±20%	
C43	CK45F1H103Z	Ceramic 0.01μF +80%, –20%	
C44	CE04W1A470	Electrolytic 47μF 10WV	
C45	CE04W1C100	Electrolytic 10μF 16WV	
C46	CK45F1H103Z	Ceramic 0.01μF +80%, –20%	
C47	CC45SL1H150J	Ceramic 15pF ±5%	
C48	CK45D1H102M	Ceramic 1000pF ±20%	

PARTS LIST

RX · NB UNIT (X55-1170-11) K type
(X55-1170-00) W, T type

Ref. No.	Parts No.	Description	Remarks
		RESISTOR	
R1~67	RD14CY2B000J	Carbon 000Ω ±5% 1/8W	
R50	R90-0505-05	Compound resistor 4.7kΩ x 8	
R51	R90-0504-05	Compound resistor 4.7kΩ x 9	☆
R59	R90-0502-05	Compound resistor 4.7kΩ x 7	☆
R60	R90-0112-05	Compound resistor 4.7kΩ x 7	☆
		SEMICONDUCTOR	
Q1~3	V03-0079-05	Transistor 2SC460(B)	
Q4	V03-0270-05	Transistor 2SC945(R)	
Q5	V03-0079-05	Transistor 2SC460(B)	
Q6~8	V03-0270-05	Transistor 2SC945(R)	
Q9~23	V01-0084-05	Transistor 2SA733(R)	
Q24,25	V03-0270-05	Transistor 2SC945(R)	
IC1	V30-0174-05	IC MC1496G	
IC2	V30-1015-16	IC TC5082P	☆
IC3	V30-0151-05	IC TD3490BP	
IC4	V30-1014-16	IC TC4519P	☆
IC5	V30-0151-05	IC TD3490BP	
IC6	V30-0132-05	IC TD3400AP	
IC7	V30-0164-05	IC TD3404AP	
IC8	V30-1016-16	IC MSM5502	☆
IC9	V30-0168-05	IC SN74176N	
IC10	V30-0167-05	IC TD3475AP	
IC11	V30-1012-16	IC SN7408N	☆
IC12	V30-0131-05	IC TD3472AP	
IC13,14	V30-0132-05	IC TD3400AP	
IC15	V30-1013-16	IC SN74157N	☆
IC16	V30-1010-16	IC SN74247N	
D1~4	V11-0076-05	Diode 1S1555	
D5~8	V11-0370-05	Diode 1S1587	
D9,10 15~23	V11-0076-05	Diode 1S1555	
D24	V11-4160-86	Zener diode WZ-071	
D25~28	V11-0076-05	Diode 1S1555 K	
D29	V11-0076-05	Diode 1S1555	
		TRIMMER	
TC1	C05-0029-15	Ceramic trimmer 50pF	
TC2	C05-0013-15	Ceramic trimmer 20pF	
TC3	C05-0010-15	Ceramic trimmer 10pF	
TC4	C05-0009-15	Ceramic trimmer 6pF	
TC5	C05-0031-15	Ceramic trimmer 10pF	
		INDUCTOR/CRYSTAL	
L1	L40-3311-03	Ferri-inductor 330μH	
L2~9	L40-1021-03	Ferri-inductor 1mH	
L10,12	L40-1011-03	Ferri-inductor 100μH	
L13	L40-1021-03	Ferri-inductor 1mH	
X1	L77-0720-05	Crystal oscillator 10.240MHz	
X2	L77-0734-05	Crystal oscillator 7.200MHz	☆
		MISCELLANEOUS	
—	E23-0047-04	Terminal x2	
—	E40-0313-05	Pin connector 3P W, T	
—	E40-0513-05	Pin connector 5Px2 K	
—	E40-0513-05	Pin connector 5P W, T	
—	E40-0713-05	Pin connector 7P	
—	E40-0813-05	Pin connector 8P	
—	E40-1013-05	Pin connector 10P	

Ref. No.	Parts No.	Description	Remarks
		CAPACITOR	
C1	CC45CH1H100D	Ceramic 10pF ±0.5pF	
C2	CC45SL1H120J	Ceramic 12pF ±5%	
C3	CK45D1H102M	Ceramic 1000pF ±20%	
C4	CC45CH1H330J	Ceramic 33pF ±5%	
C5	CK45F1H473Z	Ceramic 0.047pF +80%, −20%	
C6	C91-0013-05	Ceramic 0.01μF 50WV	
C7	CK45F1H473Z	Ceramic 0.047μF +80%, −20%	
C8	CK45D1H102M	Ceramic 1000pF ±20%	
C9	CK45F1H473Z	Ceramic 0.047μF +80%, −20%	
C10	CK45D1H102M	Ceramic 1000pF ±20%	
C11,12	CC45CH1H330J	Ceramic 33pF ±5%	
C13	CC45SH1H050D	Ceramic 5pF ±0.5pF K	
C13	CC45CH1H020C	Ceramic 2pF ±0.25pF W,T	
C14	CC45CH1H330J	Ceramic 33pF ±5%	
C15	CK45F1H103Z	Ceramic 0.01μF +80%, −20% W, T	
C15	Missing No.		
C16	CK45D1H102M	Ceramic 1000pF ±20%	
C17	CC45SH1H0R5C	Ceramic 0.5pF ±0.25pF K	
C17	CC45SH1H050D	Ceramic 5pF ±0.5pF W, T	
C18	Missing No.		
C19	CC45CH1H070D	Ceramic 7pF ±0.5pF K	
C20	CK45D1H102M	Ceramic 1000pF ±20% K W, T	
C19,20	Missing No.		
C21	CK45D1H102M	Ceramic 1000pF ±20%	
C22	CC45SL1H120J	Ceramic 12pF ±5%	
C23	CC45CH1H010C	Ceramic 1pF ±0.25pF	
C24	CC45CH1H030C	Ceramic 3pF ±0.25pF	
C25	CC45SL1H120J	Ceramic 12pF ±5%	
C26	CC45CH1H010C	Ceramic 1pF ±0.25pF	
C27	CC45CH1H070D	Ceramic 7pF ±0.25pF	
C28	CK45D1H102M	Ceramic 1000pF ±20%	
C29	CC45SL1H120J	Ceramic 12pF ±5%	
C30	CC45CH1H100D	Ceramic 10pF ±0.5pF	
C31	CC45CH1H010C	Ceramic 1pF ±0.25pF	
C32	CC45SL1H120J	Ceramic 12pF ±5%	
C33	CC45CH1H330J	Ceramic 33pF ±5%	
C34	CC45SH1H050D	Ceramic 5pF ±0.5pF	
C35	CC45CH1H050D	Ceramic 5pF ±0.5pF	
C36	CC45CH1H100D	Ceramic 10pF ±0.5pF	
C37	CK45F1H103Z	Ceramic 0.01μF +80%, −20%	
C38	CK45F1H473Z	Ceramic 0.047μF +80%, −20%	
C39	CC45SL1H120J	Ceramic 12pF ±5%	
C40	CC45SL1H101J	Ceramic 100pF ±5%	
C41,42	CK45F1H473Z	Ceramic 0.047μF +80%, −20%	
C43	C91-0013-05	Ceramic 0.01μF 50WV 103K 50V	
C44	CK45F1H473Z	Ceramic 0.047μF +80%, −20%	
C45,46	CK45F1H103Z	Ceramic 0.01μF +80%, −20%	
C47	CK45F1H473Z	Ceramic 0.047μF +80%, −20%	
C48	CE04W1C100	Electrolytic 10μF 16WV	
C49	CC45CH1H030C	Ceramic 3pF ±0.25pF	
C50~52	CK45F1H103Z	Ceramic 0.01μF +80%, −20%	
C53	CK45F1H473Z	Ceramic 0.047μF +80%, −20%	
C54	CK45F1H103Z	Ceramic 0.01μF +80%, −20%	
C55	CC45SL1H101J	Ceramic 100pF ±5%	
C56	CK45F1H103Z	Ceramic 0.01μF +80%, −20%	
C57	CQ92M1H223K	Mylar 0.022μF ±10%	
C58	CK45F1H473Z	Ceramic 0.047μF +80%, −20%	
C59	CK45F1H103Z	Ceramic 0.01μF +80%, −20%	
C60	CE04W1H010	Electrolytic 1μF 50WV	
C61	CK45F1H103Z	Ceramic 0.01μF +80%, −20%	
C62	CC45CH1H010C	Ceramic 1pF ±0.25pF	
C63	CQ92M1H223K	Mylar 0.022μF ±10%	
C64	CQ92M1H473K	Mylar 0.047μF ±10%	
C65	CK45D1H102M	Ceramic 1000pF ±20%	
C66	CC45SL1H331J	Ceramic 330pF ±5%	
C67	CK45F1H103Z	Ceramic 0.01μF +80%, −20%	
C68	Missing No.		
C69	CK45F1H103Z	Ceramic 0.01μF +80%, −20%	
C70	CE04W1H010	Electrolytic 1μF 50WV	
C71	CK45F1H103Z	Ceramic 0.01μF +80%, −20%	

PARTS LIST

Ref.No.	Parts No.	Description	Re-marks
C72	CK45F1H223Z	Ceramic 0.022μF +80%,−20%	
C73,74	CK45F1H103Z	Ceramic 0.01μF +80%,−20%	
RESISTOR			
R1~53	RD14CY2BOOOJ RD14BY2BOOOJ	Carbon OOOΩ ±5% 1/8W	
R6	Missing No.		
R5,11	Missing No.	W, T	
SEMICONDUCTOR			
Q1	V09-1008-16	FET 2N5485	☆
Q2	V09-0057-05	FET 3SK41(L) or 3SK40(L)	
Q3	V09-0061-05	FET 3SK41(M) or 3SK40(M)	
Q4	V09-1002-26	FET 3SK35T(GR)	
Q5	V09-0012-05	FET 2SK19(GR)	
Q6	V01-0037-05	Transistor 2SA495(/)	
Q7	V09-0012-05	FET 2SK19(GR)	
Q8	V30-0006-05	IC TA7045M(R)	
Q9	V03-0079-05	Transistor 2SC460(B)	
Q10,11	V03-0123-05	Transistor 2SC733(Y)	
D1~6	V11-0317-05	Diode 1S2208	
D2	Missing No.	W, T	
D7,8	V11-0076-05	Diode 1S1555	
D9~13	V11-0051-05	Diode 1N60	
D14	V11-0374-05	Diode 1SS16	
TH1	V11-7762-16	Thermistor 31D26	
POTENTIOMETER/RELAY			
VR1	R12-3022-05	Semi-fixed resistor 10kΩ (B)	
VR2	R12-7013-05	Semi-fixed resistor 500kΩ (B)	
VR3	R12-3025-05	Semi-fixed resistor 10kΩ (B)	
VR4	R12-0039-05	Semi-fixed resistor 500Ω (B)	
VR5	R12-2017-05	Semi-fixed resistor 5kΩ (B)	
RL1	S51-1403-05	Relay	☆
INDUCTOR/COIL/IFT/FILTER			
L1	L40-1021-03	Ferri-inductor 1mH	
L2	L33-0220-05	Choke coil 2.4μH	
L3~6	L40-1021-03	Ferri-inductor 1mH	
L7	L33-0025-05	Choke coil 1 1μH	
T1	L31-0324-05	Coil (C) 144MHz	
T2,3	L31-0347-05	Tuning coil 144MHz	
T4~7	L31-0324-05	Coil (C) 144MHz	
T8	L31-0347-05	Tuning coil 144MHz	
T9,10	L30-0502-05	IFT 10.7MHz (green)	
T11~13	L30-0501-05	IFT 10.7MHz (pink)	
T14~16	L30-0502-05	IFT 10.7MHz (orange)	
MCF	L71-0021-05	Monolithic filter	
MISCELLANEOUS			
—	E23-0047-05	Terminal x28 K	
—	E23-0047-05	Terminal x27 W, T	
—	F11-0113-05	Shield case	

FINAL UNIT (X56-1250-00)

Ref.No.	Parts No.	Description	Re-marks
CAPACITOR			
C1	CC45SL2H680K	Ceramic 68pF ±10%	
C2	CK45F1H103Z	Ceramic 0.01μF +80%,−20%	
C3	CC45SL2H390K	Ceramic 39pF ±10%	
C4	CC45SL2H330K	Ceramic 33pF ±10%	
C5	CE04W1A101	Electrolytic 100μF 10WV	
C6	Missing No.		
C7	CM93D2H220J	Super mica 22pF ±5%	
C8	Missing No.		
C9	CK45F1H103Z	Ceramic 0.01μF +80%,−20%	
C10	CE04W1H4R7	Electrolytic 4.7μF 50WV	
C11	CK45F1H103Z	Ceramic 0.01μF +80%,−20%	
C12	CE04W1H4R7	Electrolytic 4.7μF 50WV	
CK1~6	C90-0194-05	Ceramic 0.001μF	
RESISTOR			
R1~4	RD14BY2EOOOJ	Carbon OOOΩ ±5% 1/4W	
R5	RC05GF2H101J	Carbon 100Ω ±5% 1/2W	
SEMICONDUCTOR			
Q1	V11-0315-05	Transistor 2N5641	
Q2	V11-0316-05	Transistor 2N5642	
D1~3	V11-0076-05	Diode 1S1555	
D4	V11-0318-05	Diode V06J	
TRIMMER/RELAY			
TC1,2	C05-0029-15	Ceramic trimmer 50pF	
TC3,4	C05-0054-05	Ceramic trimmer 60pF	
RL1	S51-1402-05	Relay	
COIL			
L1	L34-0432-05	VHF coil (A) 0.8φ 1t	
L2	L33-0219-05	RF Choke coil 0.2μH/100Ω	
L3	L34-0433-05	VHF coil (B) 0.8φ 3t	
L4	L34-0435-05	VHF coil (D) 0.8φ ½t	
L5	L33-0222-05	Choke coil 0.5φ 11t	
L6	L34-0444-05	VHF coil (E) 1.2φ 1t	
L7	L33-0222-05	Choke coil 0.5φ 11t	
L8	L31-0325-15	Coil	
L9, 10	L33-0222-05	Choke coil 0.5φ 115	
MISCELLANEOUS			
—	E23-0001-05	Hermetic terminal x5	
—	E23-0046-04	Terminal	
—	F01-0172-24	Heat sink	
—	F01-0173-13	Heat sink (B)	
—	G02-0056-04	Spring for earth	
—	J31-0109-04	Spacer ring	
—	N30-3008-41	Round head screw x5	
—	N30-3012-41	Round head screw x4	

PACKING

PACKING

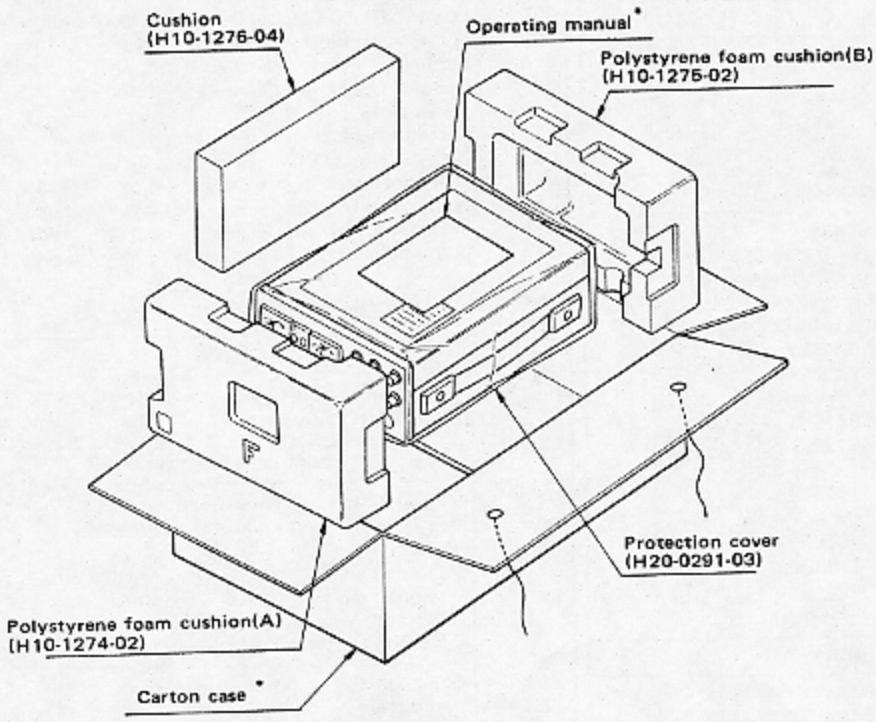

ACCESSORIES

Operating manual *
Warranty card *
4P connector plug *
9P MT plug (E05-0901-05)
Phone plug (E12-0001-05)
Phono plug (E14-0101-05) X 2
Fuse 1A (F05-1023-05)
Fuse 2A (F05-2023-05) *
Fuse 5A (F05-5022-05)
Foot (J02-0049-14) X 2
Round head screw (N30-4012-11) X 2
Microphone *
AC power cord *
DC power cord (X42-1050-00)

* Refer to PARTS LIST.

MEMO

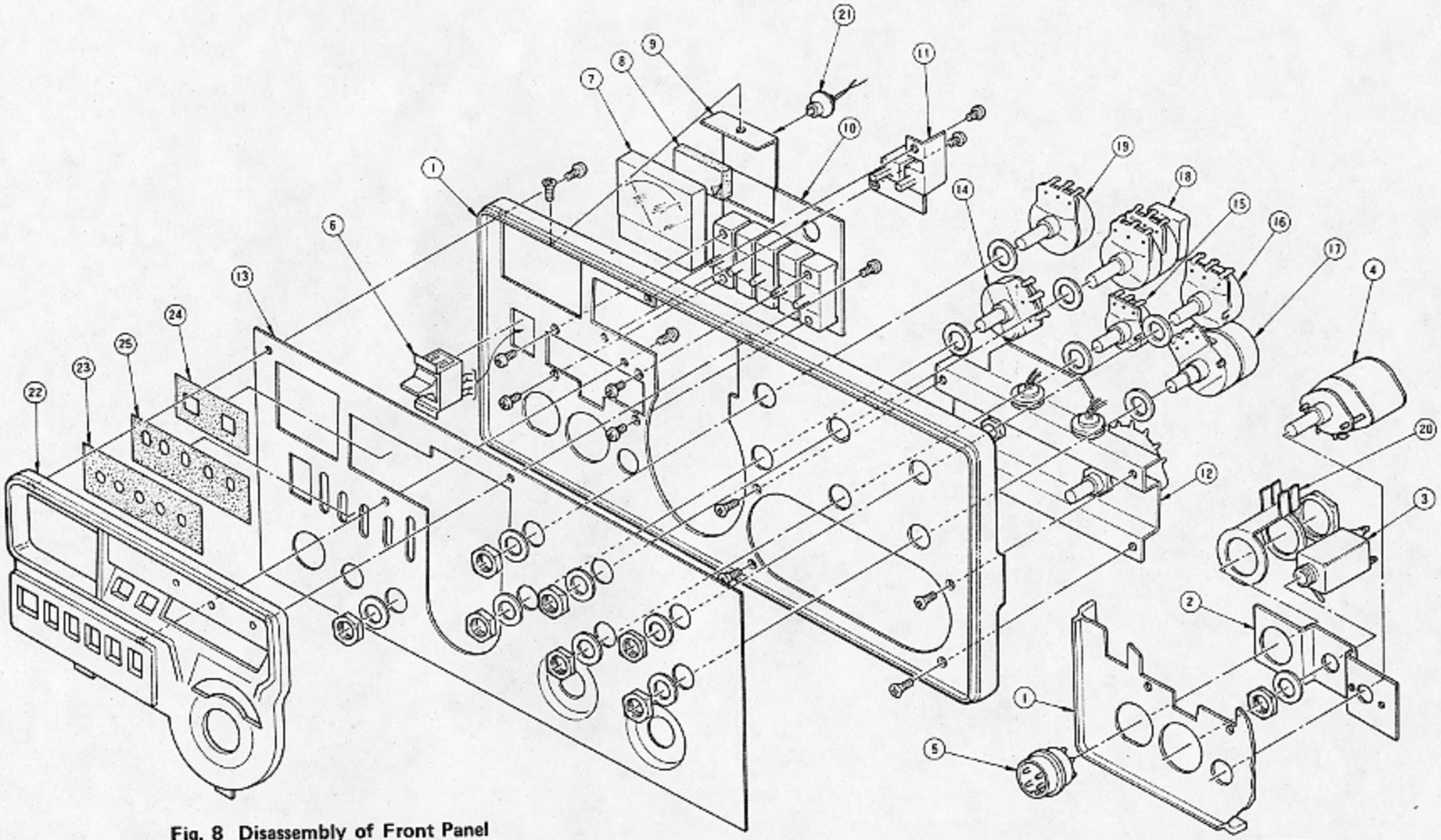

Fig. 8 Disassembly of Front Panel

No.	Parts name	Parts No.	Remarks	No.	Parts name	Parts No.	Remarks
1	Panel escutcheon	B01-0606-05		13	Ornament panel	A21-0713-03	
2	Mounting hardware			14	Variable resistor	R03-3055-05	RIT
3	Phone jack	E11-0034-25		15	Variable resistor	R01-3402-05	SQUELCH
4	Rotary switch	S01-4402-05	MODE	16	Variable resistor	R03-3055-05	DRIVE
5	4P microphone socket	E06-0403-05		17	Variable resistor	R08-9010-15	AF · RF
6	Paddle switch	S59-2025-05	POWER	18	Variable resistor	R08-9401-05	VOX GAIN, DELAY
7	Meter	B31-0606-05		19	Variable resistor	R01-3403-05	SSB, MIC
8	Cushion (B)	G13-0605-04		20	Lead wire stopper		
9	Meter stopper			21	Pilot lamp	B30-0804-05	
10	Switch unit	X01-1060-00		22	Dial escutcheon ass'y	B07-0604-05	
11	PC board for push switch	J25-2557-04		23	Switch mask	F15-0165-14	
				24	Switch mask (B)	F15-0606-04	

DISASSEMBLY

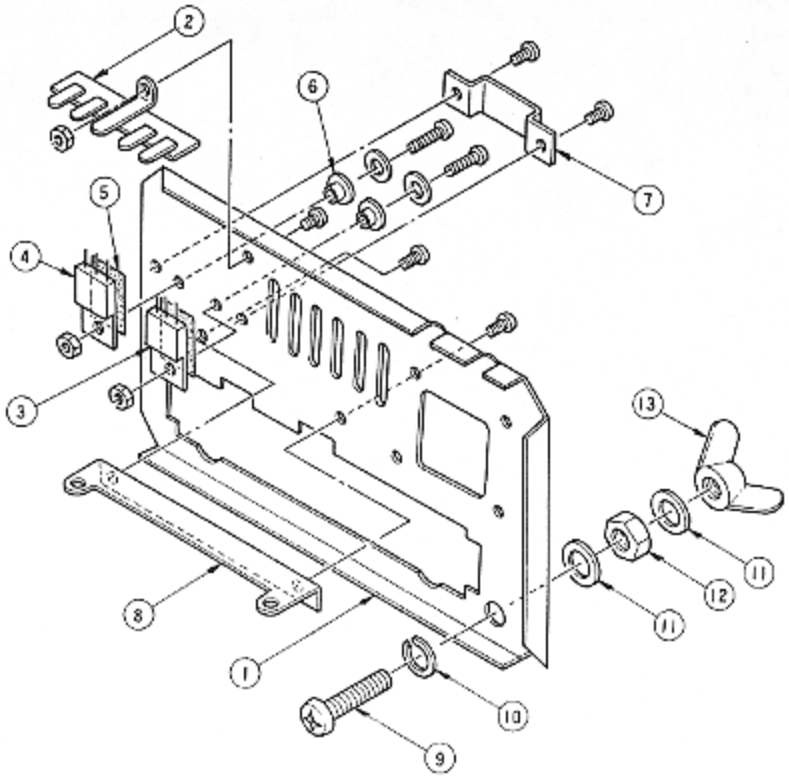

Fig. 9 Disassembly of Rear Panel (A)

No.	Parts name	Parts No.	Remarks
1	Rear panel (A)	A23-1402-03	
2	Lug terminal	E22-0405-05	
3	Transistor	V01-0138-05	2SA671 TD (A)
4	Transistor	V04-0046-05	2SC235 (Y)
5	Insulating mica	F20-0078-05	
6	Insulating washer	N19-0201-05	
7	Transistor cover	F07-0327-05	
8	PC board mounting hardware		
9	Round head screw	N30-6018-41	
10	Spring washer	N16-0060-41	
11	Washer	N19-0089-00	
12	Nut	N10-3060-11	
13	Butterfly nut	N14-0020-04	

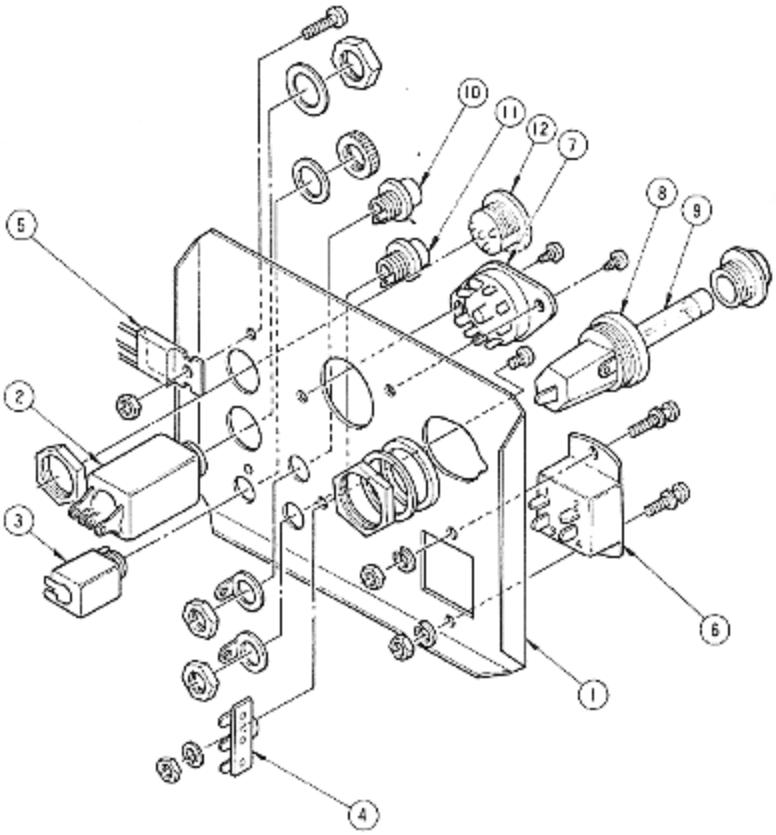

Fig. 10 Disassembly of Rear Panel (B)

No.	Parts Name	Parts No.	Remarks
1	Rear panel (B)	See parts list.	
2	KEY jack	E11-0005-15	
3	Speaker jack	E11-0003-15	
4	Lug terminal	E22-0007-05	
5	IC	V30-1001-16	FS7805M
6	4P socket	E09-0409-05	POWER
7	9P MT socket	E01-0903-05	EXT, VFO
8	Fuse holder	J13-0004-05	
9	Fuse	F05-2023-05	2A
10	1P phono jack	E13-0101-05	RL MAKE
11	1P phono jack	E13-0101-05	ALC INPUT
12	4P connector	E09-0471-05	K type

DISASSEMBLY

1. Removing the Case (upper and lower covers)

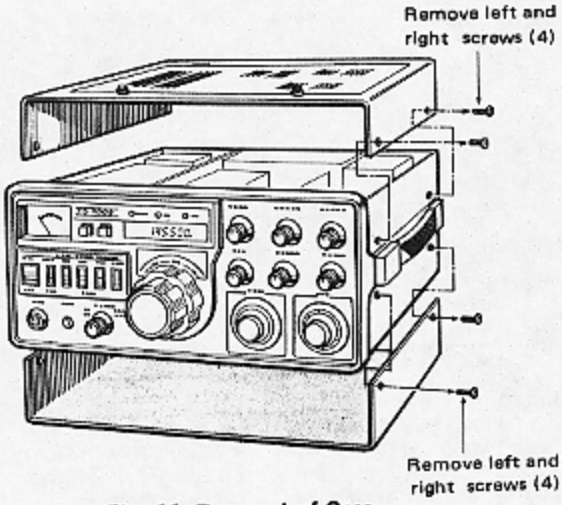

Fig. 11 Removal of Case

2. Opening the Panel

(1) Remove the screws from both sides of the panel (4 screws on symmetrical positions).
Note: One screw at the lower right is smaller than the other.

(2) Remove the screw which is grounds the power unit shield cover.

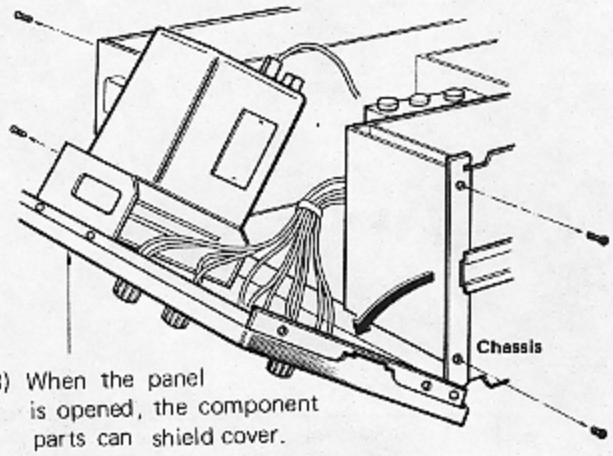

(3) When the panel is opened, the component parts can shield cover.

Fig. 12 Opening the Panel

3. Removing the VFO

(1) Remove the dual knob from the panel front.
(2) Open the panel by referring to item 2 "Opening the Panel".
(3) Remove the power cord and output cord from the rear of VFO unit.
(4) Remove 4 screws holding the panel escutcheon on the VFO mounting fixture at the upper and lower sections.
(5) Remove 2 screws holding the display unit, then remove the 2 lamps.

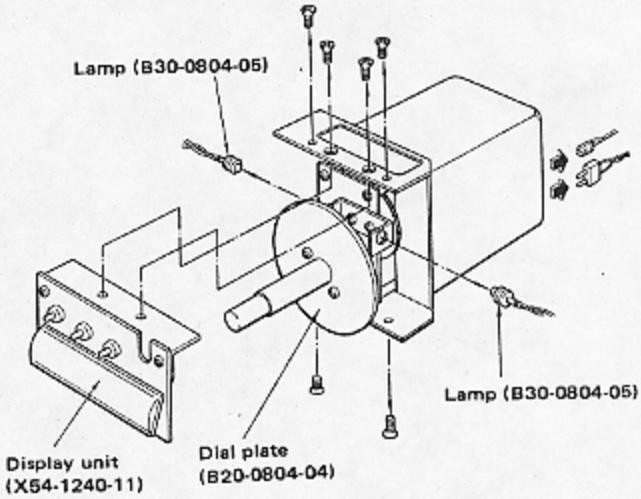

Fig. 13 Removing the VFO

4. Removing the Dial Escutcheon

(1) Remove VFO by referring to item 3 "Removing the VFO".
(2) Remove the meter.
(3) Remove 3 screws from the rear panel.

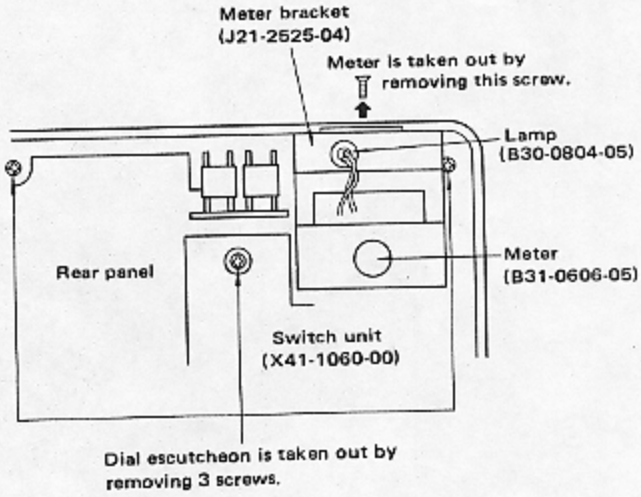

Fig. 14 Removing the dial Escutcheon

5. Replacement of Power Switch and Lever Switch

(1) Remove VFO and dial escutcheon by referring items 2, 3 and 4.

[Replacement of Power Switch]

(1) Push the claw on the switch at the rear panel toward you to remove the switch.

[Replacement of Lever Switch]

(1) Remove 4 screws holding the switch on the panel.

DISASSEMBLY

6. Removing the Power Unit

(1) Remove 4 screws from the upepr shield cover.
(2) Remove 4 hexagonal bosses.
(3) Remove the screw at the center of the side escutcheon and 2 screws holding the power unit.
(4) Remove 3 screws holding the heat sink at the left of the power unit.
(5) Lift the power unit slightly up and remove 2 screws holding the heat sink at the right of the power unit.
(6) Life and remove the power unit.

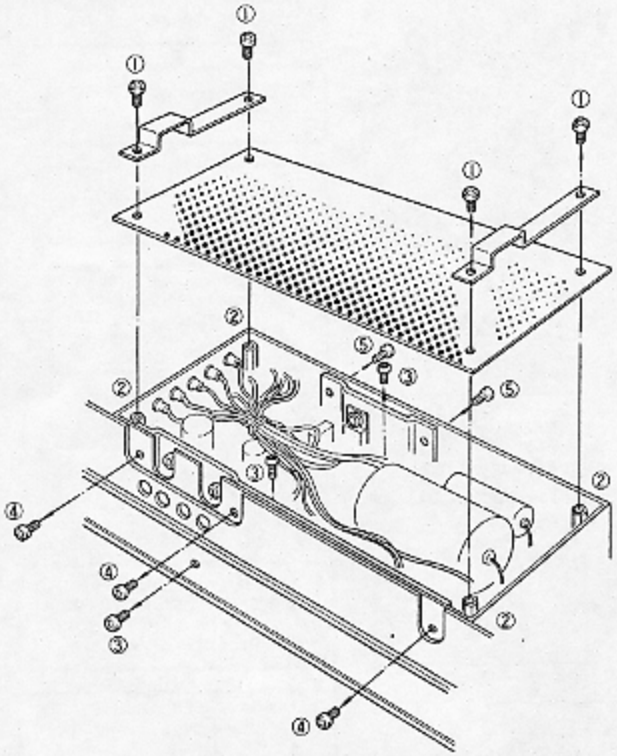

Fig. 15 Removing the Power Unit

7. Replacement of Final Transistor

(1) Unsolder (2 positions) the coaxial cable connected to BPF.
(2) Remove 4 screws yolding the final transistor.
(3) Remove 4 screws holding the heat sink and slightly draw out the final unit.
(4) Remove the nut holding the transistor using a nut remover.

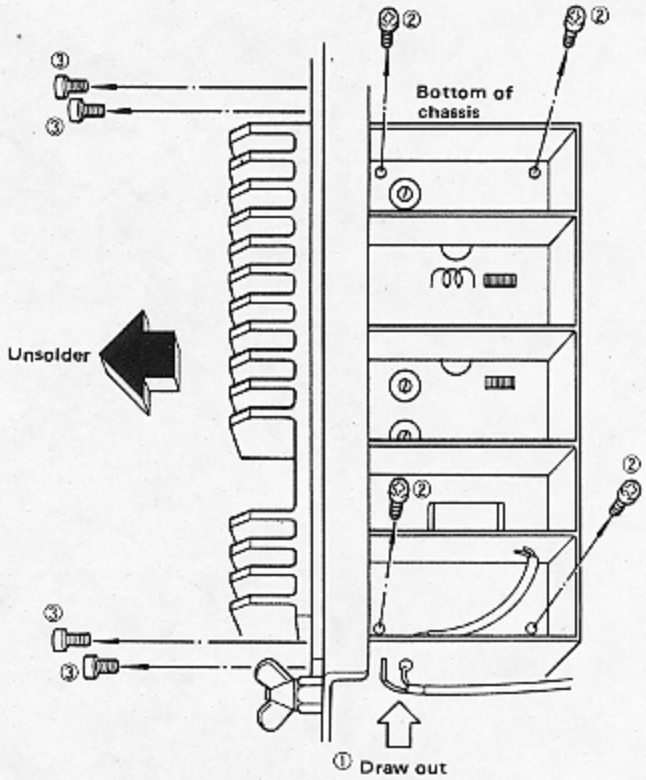

Fig. 16 Replacement of Final Transistor

8. Opening the FM.IF Unit

(1) For inspection and adjustment of RX.NB unit, open the FM.IF unit by removing 2 screws holding the unit.

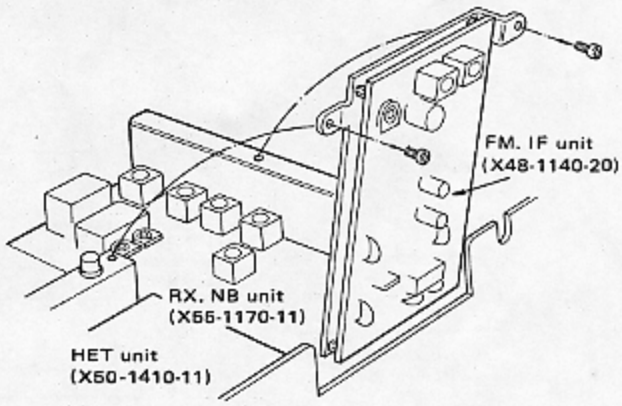

Fig. 17 Opening the FM. IF Unit

TROUBLESHOOTING

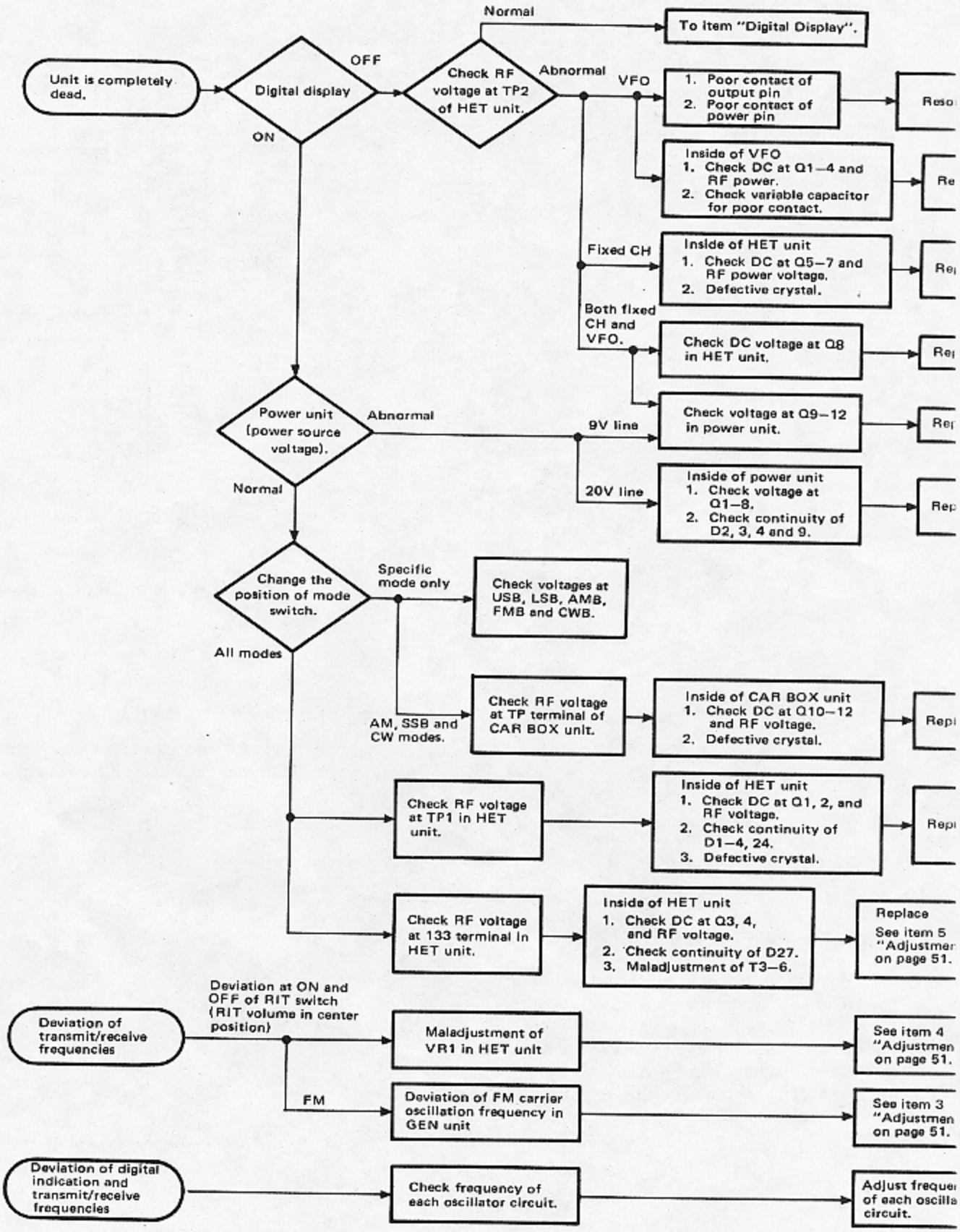

TROUBLESHOOTING

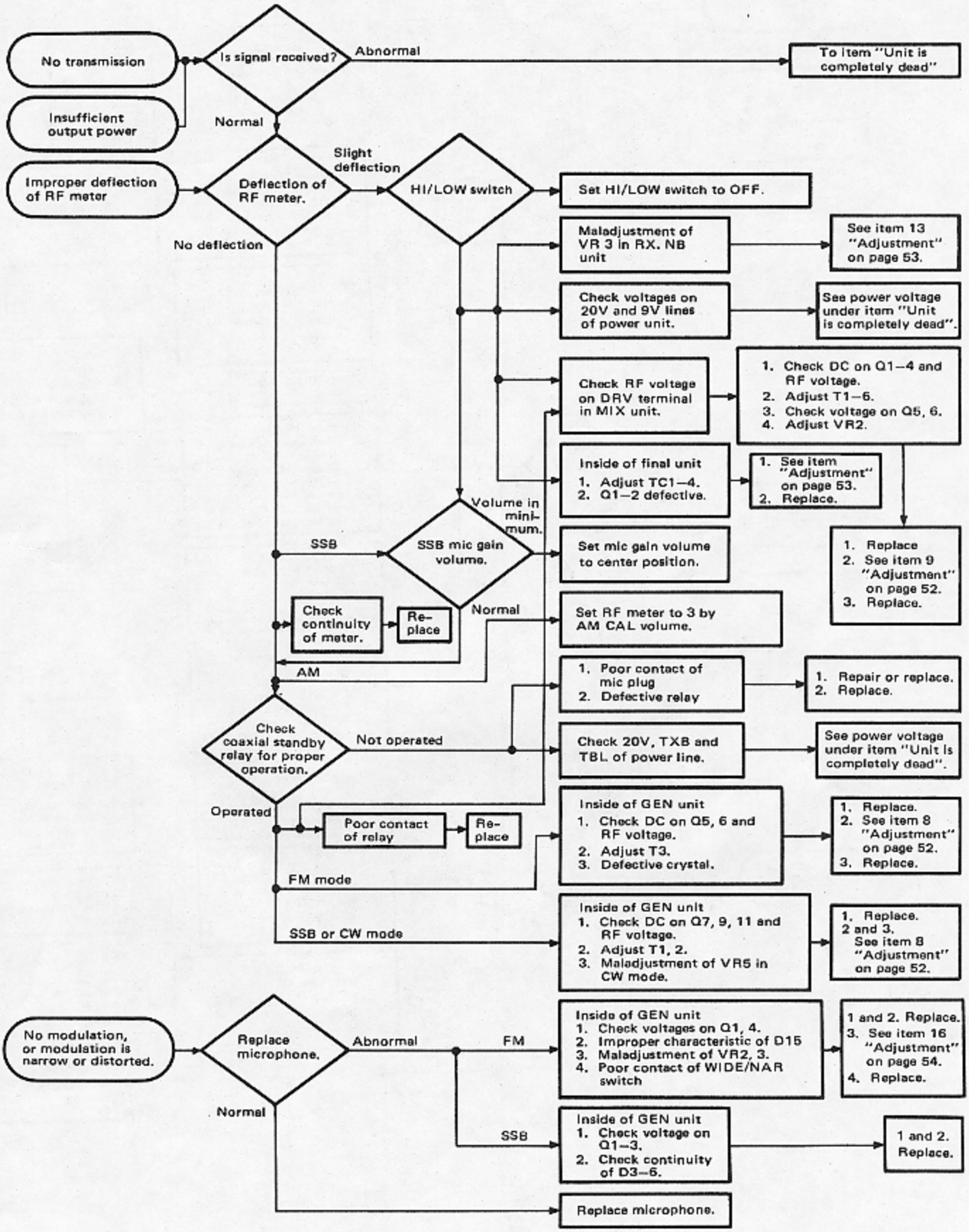

TROUBLESHOOTING

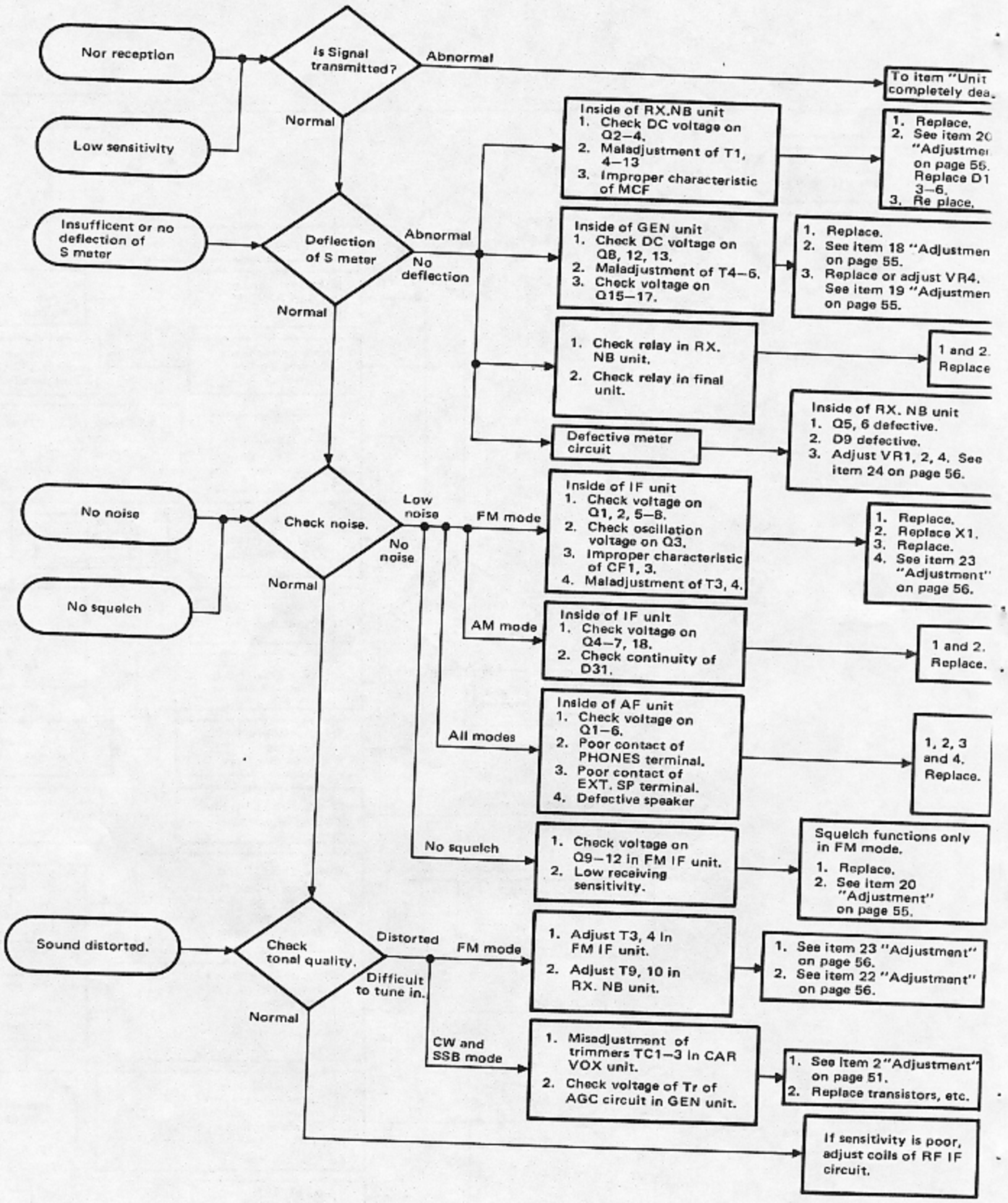

TROUBLESHOOTING

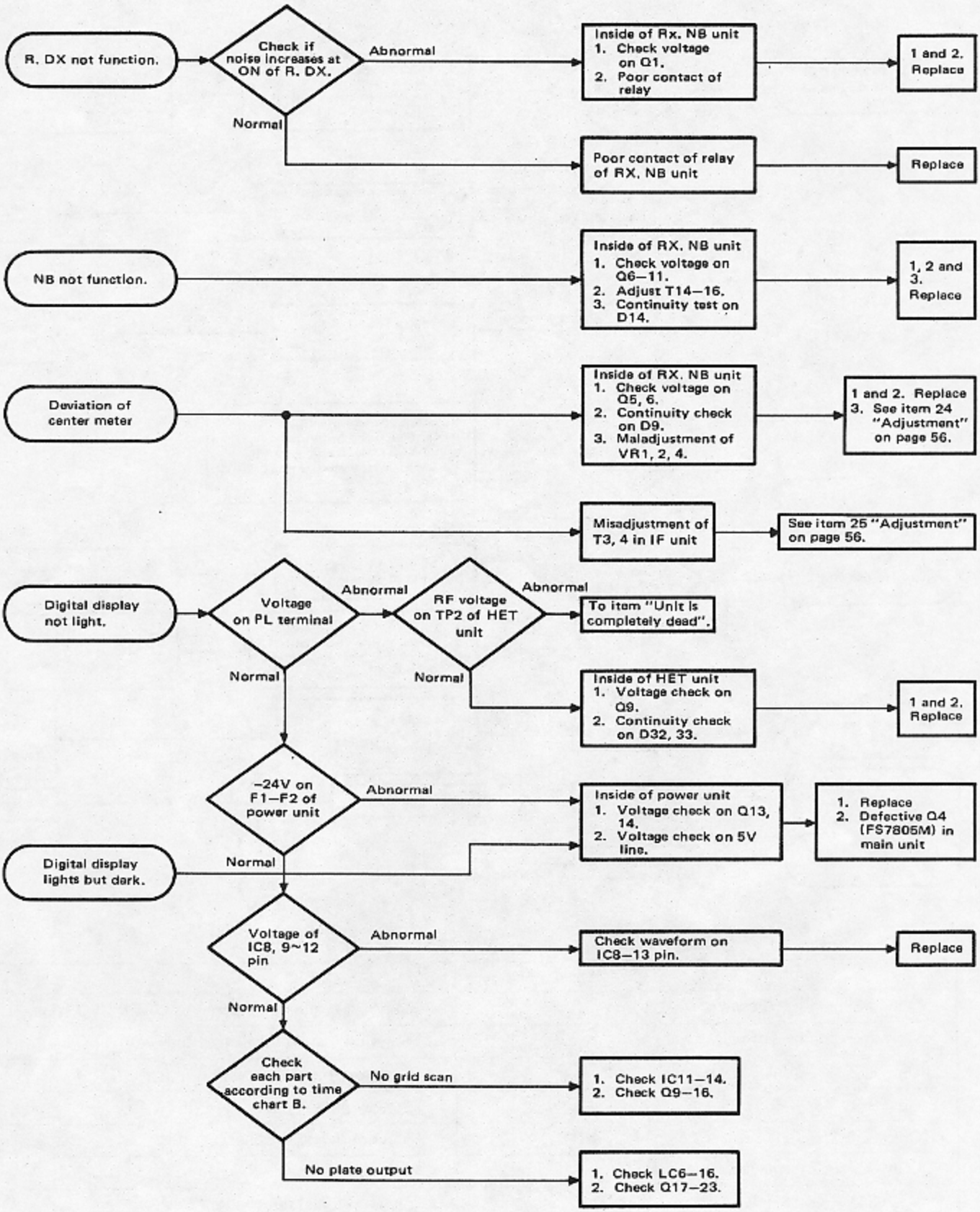

TROUBLESHOOTING

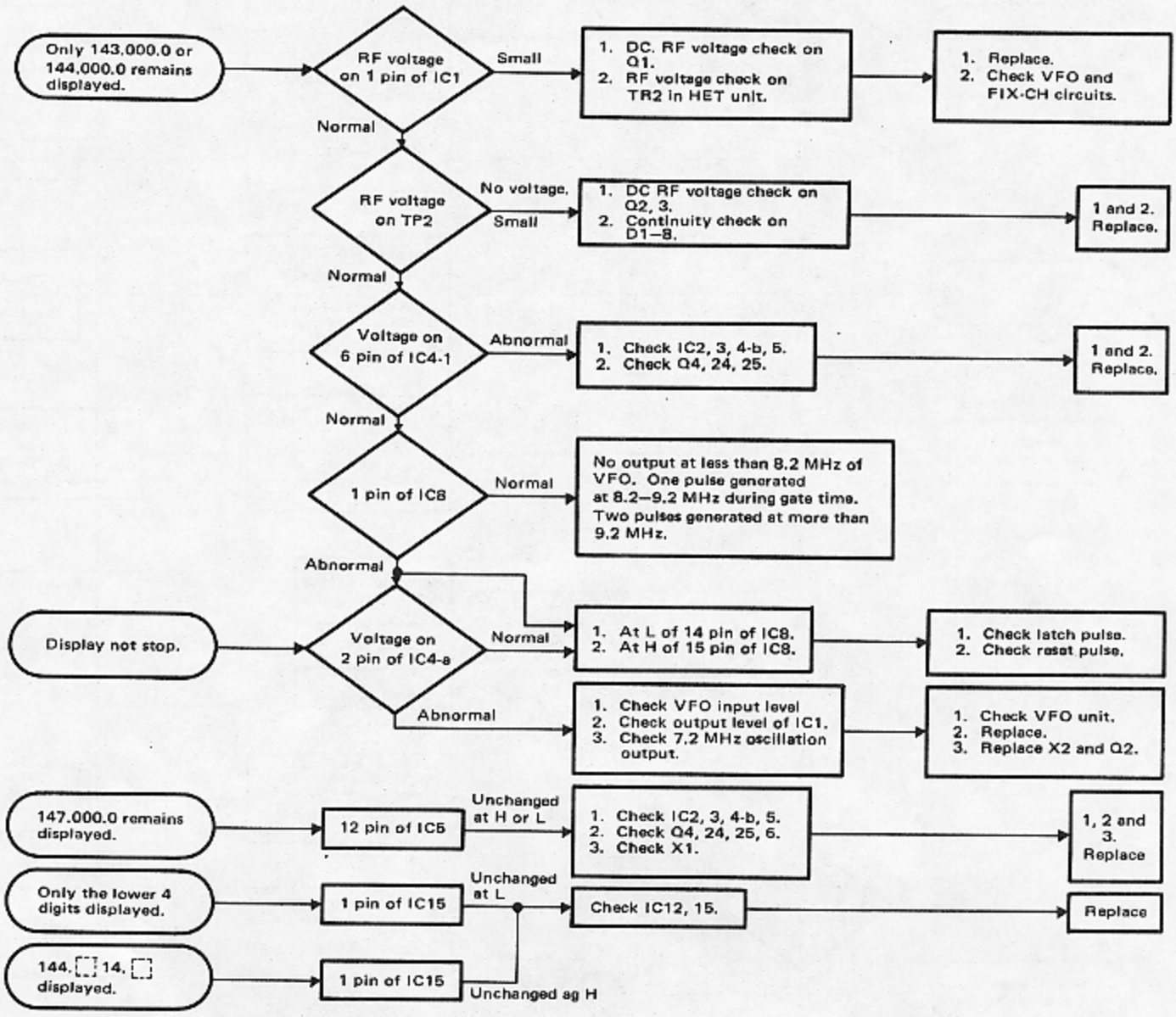

Symptom	Check point	Cause
Only odd numbers diaplayed	I C 8 4 pin I C15 12 pin	Stays on H and not changed to L with VFO.
Only even numbers displayed	I C 8 4 pin I C15 12 pin	Stays on L and not changed to H with VFO input.
Only 2, 3, 6, 7 displayed.	I C 8 5 pin I C15 9 pin	Stays on H and not changed to L.
Only 0, 1, 4, 5, 8, 9 displayed.	I C 8 5 pin I C15 9 pin	Stays on L and not changed to H.
Only 0, 1, 2, 3, 8, 9 displayed.	I C 8 6 pin I C15 4 pin	Stays on L and not changed to H.
Only 4, 5, 6, 7 displayed.	I C 8 6 pin I C15 4 pin	Stays on H and not changed to L.
8 and 9 not displayed.	I C 8 7 pin I C15 7 pin	Stays on L and not changed to H.
Only 8 and 9 dispalyed.	I C 8 7 pin I C15 7 pin	Stays on H and not changed to L.

Receiving level diagram

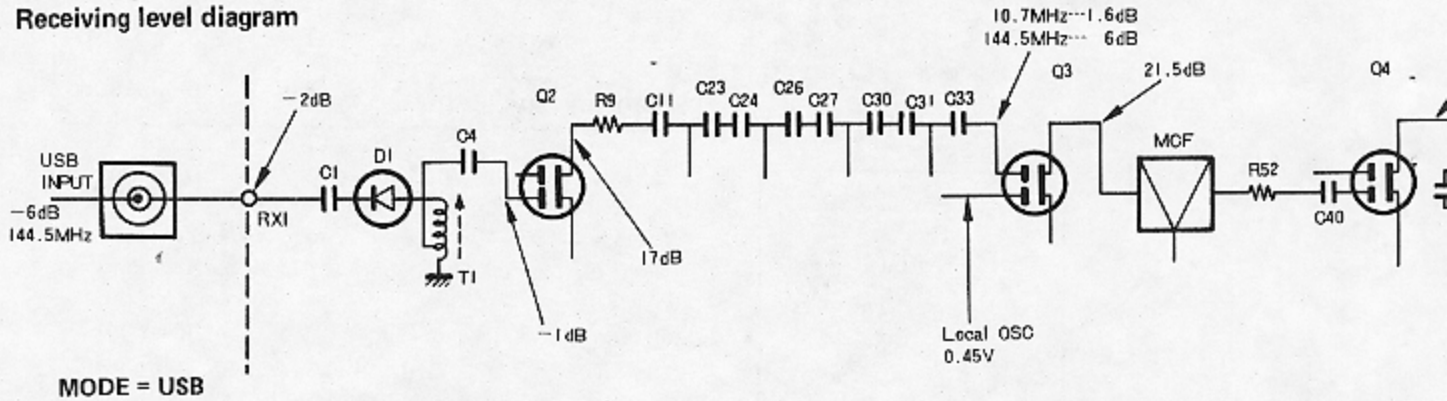

MODE = USB

1. Apply SSG signal of 144.5MHz, 0.5μV (−6dBμ) to ANT terminal and adjust AF GAIN for AF output of o.63V/8Ω. Keep AF GAIN control at that point.
2. Connect SSG to each test point. Adjust SSG output for AF output of 0.63V/8Ω. Measure the output obtained.

RX.

Transmitting level diagram

MODE = USB, MIC GAIN = center position
Apply 2 mV, 1.5 kHz signal to MIC terminal and measure voltage at each point using RF VTVM.

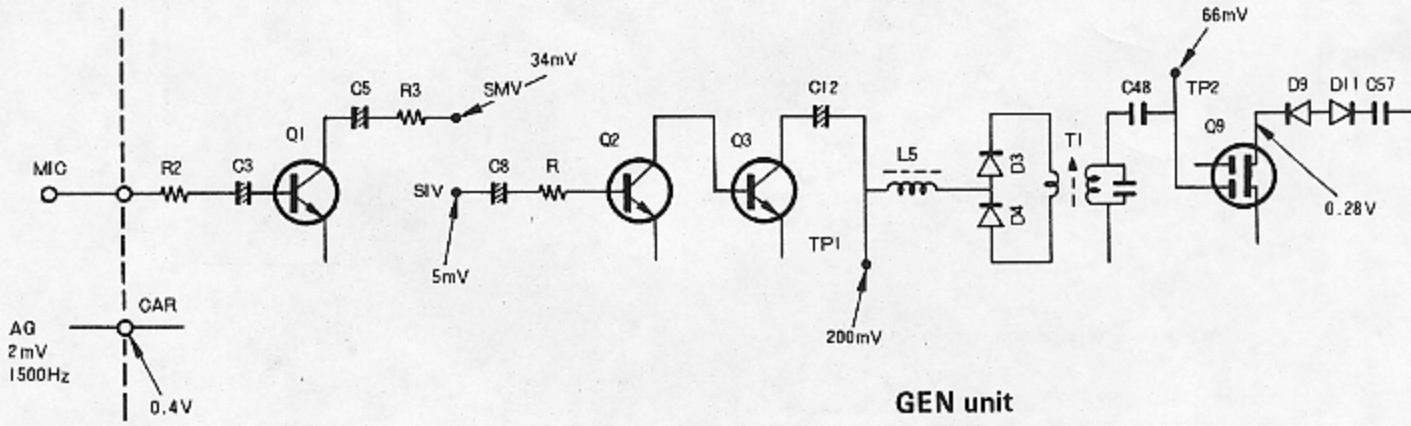

GEN unit

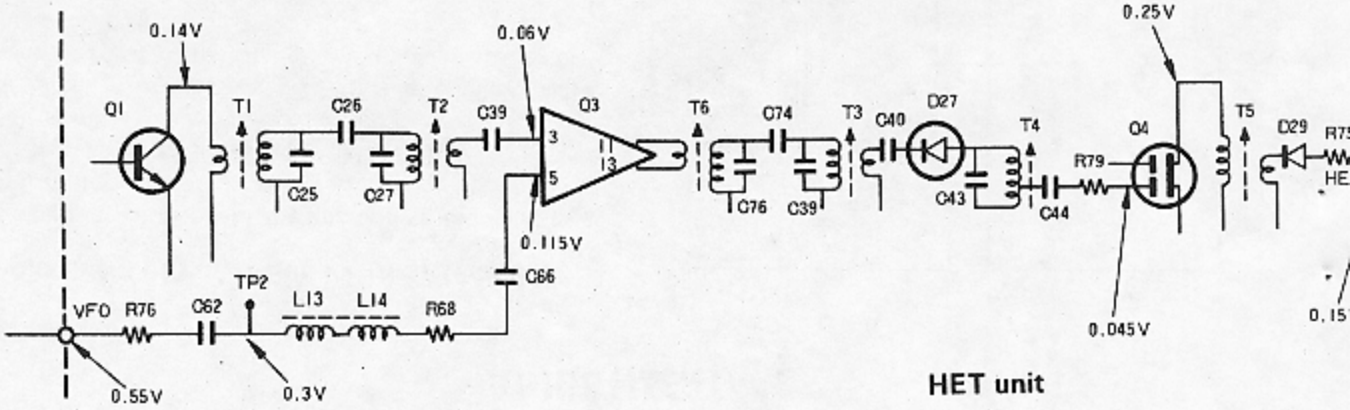

HET unit

L DIAGRAM

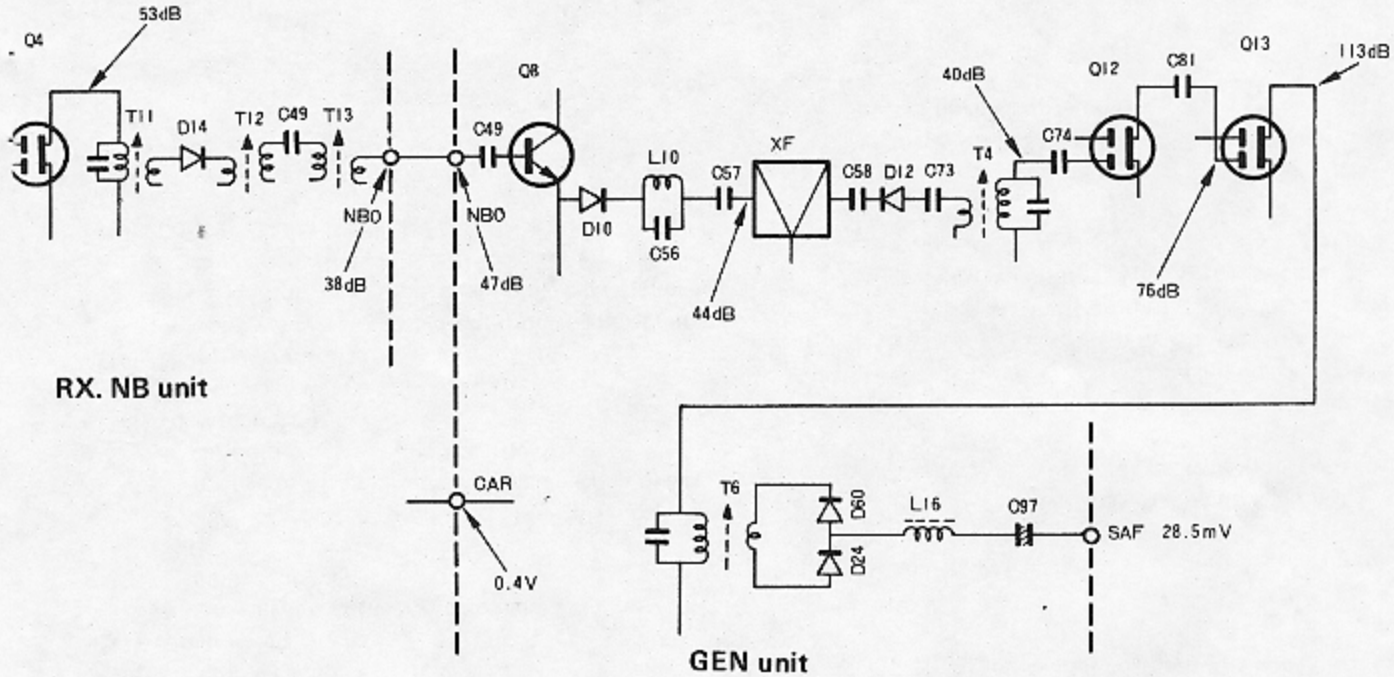

RX. NB unit

GEN unit

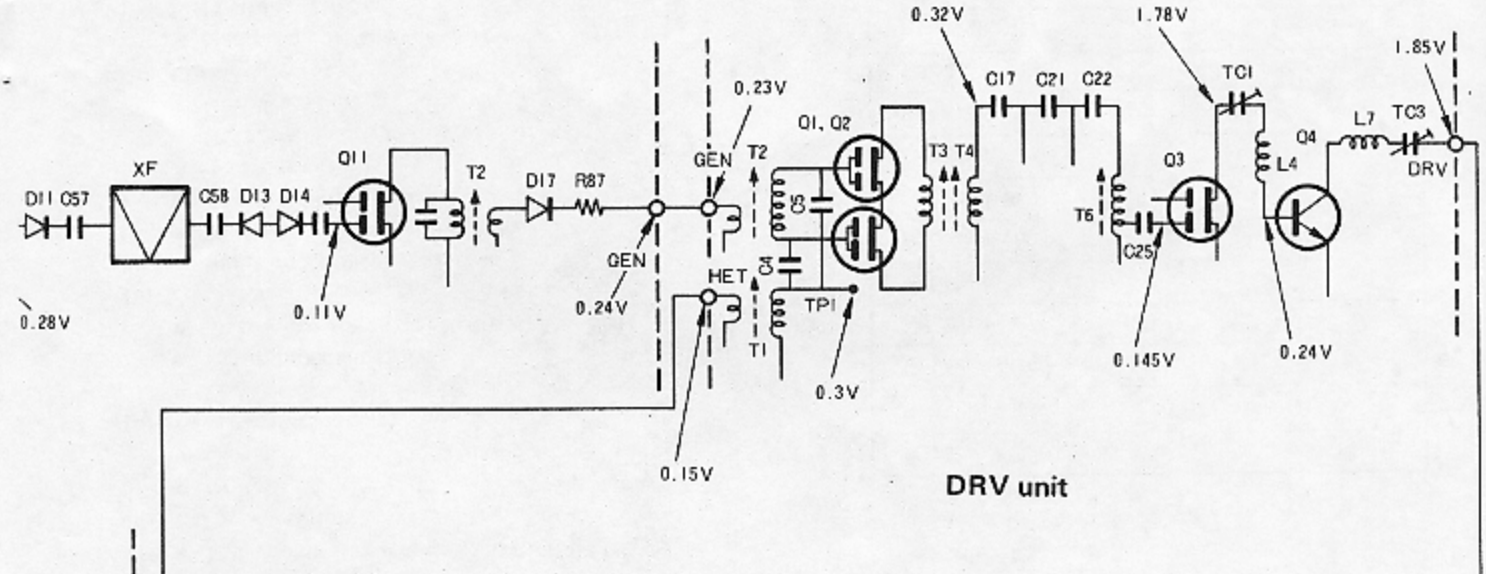

DRV unit

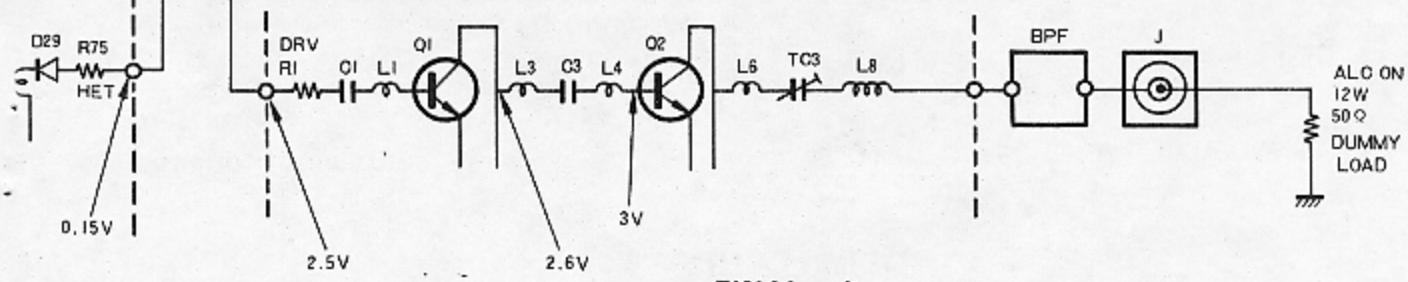

FINAL unit

ADJUSTMENT

Measuring instruments

(1) **Tester**
- Use a high input impedance tester.

(2) **RF VTVM**
- Input impedance: More than 1 MΩ, less than 20PF
- Voltage range: F.S = 10 mV – 300 V
- Measurable frequencies: Up to 200 MHz

(3) **Frequency counter**
- Input sensitivity: About 50 mV
- Measurable frequencies: Up to 150 MHz

(4) **DC power supply**
- Voltage: 10 V – 17 V, adjustable
- Current: More than 5 A

(5) **Power meter**
- Power measured: About 20 W
- Input impedance: 50 Ω
- Measurable frequencies: Up to 150 MHz

(6) **AF VTVM**
- Input impedance: More than 1 MΩ
- Voltage range: F.S = 1 mV – 30 V
- Measurable frequencies: 50 Hz – 10 kHz

(7) **AF generator (AG)**
- Output frequency: 100 Hz – 10 kHz
- Output voltage: 0.5 mV – 1 V

(8) **Linear detector**
- Measurable frequencies: 150 MHz

(9) **Field strength meter**
- Measurable frequencies: 150 MHz

(10) **Directional coupler**

(11) **Oscilloscope**
- Use a high sensitivity oscilloscope with horizontal input terminal.

(12) **SSG**
- SSG capable of producing 144 MHz band frequencies with amplitude and frequency modulations.
- Output level: –20dB to 100 dB

(13) **Dummy resistor**
- 8 ohms, 5 W

(14) **Noise generator**
- Noise generator capable of producing noise similar to ignition noise and containing high frequency component of more than 145 MHz.

(15) **Cord with clips (see Fig. 21)**

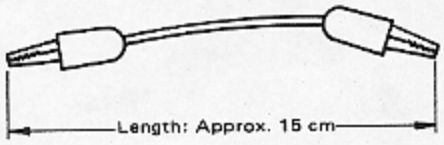

Fig. 18

NOTE TO TECHNICAL PERSONNEL

Before attempting alignment, be sure that proper test equipment is available. It is best before tuning factory sealed adjustments, to verify the gain of the circuit in question.

Preparation

(1) Unless otherwise noted, knobs and switches should be set as shown in **Table 3.**

POWER switch	ON
STBY switch	REC REC
S meter switch	S
NB switch	OFF
RIT switch	OFF
R. DX switch	OFF
FIX. CH switch	VFO
VOX knob	OFF
RF GAIN knob	Full clockwise
SQUELCH knob	Full counterclockwise
AF knob	Full counterclockwise
TONE SW	OFF

Table 3 Set Positions of Knobs

(2) For adjustment (trimmers, coils, etc.), use an insulated rod such as a bakelite rod.

(3) During adjustment of receiver section, do not set the STBY switch to SEND for protection of signal generator.

(4) When connecting power cord, make sure that the power switch and VOX knob are in OFF position.

Note: If the VOX knob is turned from the OFF position, the transmitter will operate momentarily when the power switch is set to ON. Be careful particularly when adjusting the receiver section.

In these ADJUSTMENTS, SSG output level is specified at open-circuit voltage.

ADJUSTMENT

1. Adjustment of Power Supply (X43-1240-01)

(1) Connect a voltmeter to the appropriate terminals as shown to adjust voltages.
9V terminal – Adjust VR-1 9.00 ± .01V
21V terminal – Adjust VR-2 21.00 ± .5V

(2) Regulation check. Connect TS-700S to dummy load, transmit FM and check the power supply regulation at the following points:
–6V = –6 ± 0.5V
TBL = –4 ± 0.5V
RB = 0.75V
5V = 5V ± 0.2V
–24V = –24V + 1.2V
F1 F2 = 3.5V (AC)

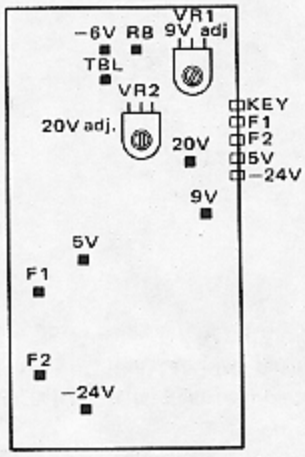

Rectifier Unit (X43-1240-01)

Fig. 19 Adjustment of Power Supply

2. Adjustment of Carrier Board (X50-1420-00)

(1) Connect TS-700S to dummy load, make sure Fix CH switch is in an empty position, (not VFO).

(2) Connect an RF VTVM to TP as shown and adjust T-2 for maximum, about 0.8V rms. Standby to send for this adjustment.

(3) Connect frequency counter to TP, and adjust trimmers for each mode as shown in **Table 4.**

(4) Check to see that in AM position the frequency changes from 10.70060 TX to 10,70150 in receive.

MODE	STBY	ADJ	OUTPUT RF VOLTAGE OR FREQUENCY
USB	REC	TC1	10.6985 MHz
LSB	REC	TC2	10.7015 MHz
CW	SEND	TC3	10.7006 MHz

Table 4 Carrier Oscillation Frequency

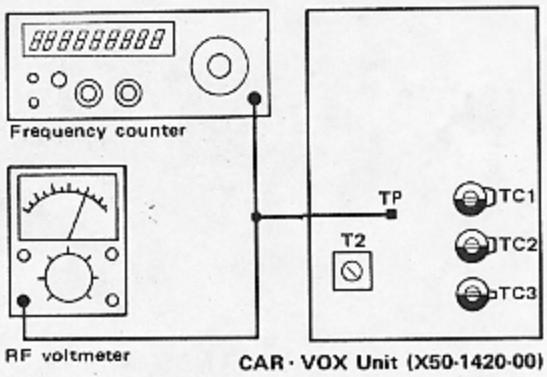

Fig. 20 Adjustment of Carrier Board

3. Adjustment of FM Carrier Freq. (X52-1080-21)

(1) Position knobs as follows:
Mode to FM
Fix CH to 11 (empty)
Stand By to "Send"

(2) Connect a frequency counter to GEN terminal and adjust L-3 for 10.7000 Mhz ±10 Hz.

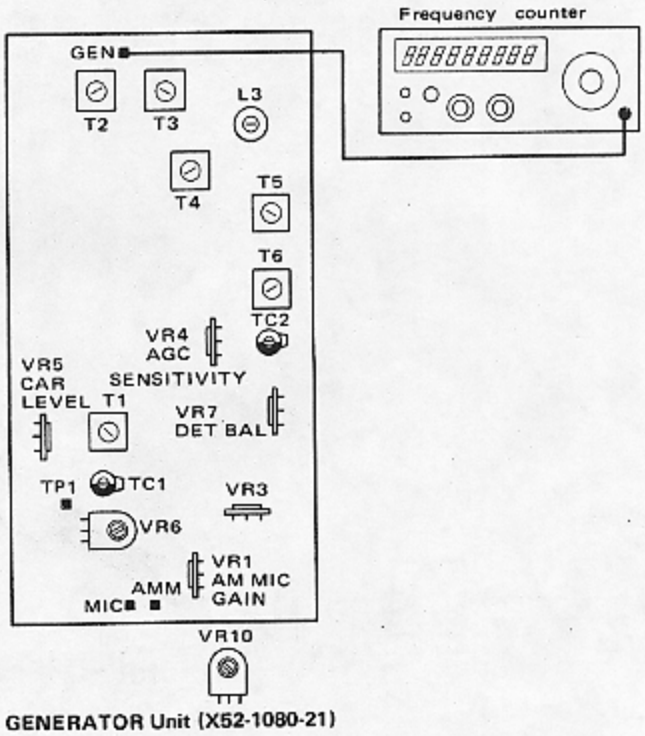

Fig. 21 Adjustment of FM Carrier Frequency

ADJUSTMENT

4. Adjustment of HET Board (X50-1410-11) K type (X50-1410-60) W, T type

(1) Position knobs as follows:
RIT to ON
RIT VR to center
(2) Connect a frequency counter to TP1.
(3) Connect short clip lead from TP-3 (lead of L-9), and any 9V source.
(4) Adjust L-1 through L-6 per **Table 5.**
Note: If sufficient adjustment of coils cannot be obtained a slight adjustment of L-7 may be necessary.
(5) After adjustment check frequency per **Table 5.**

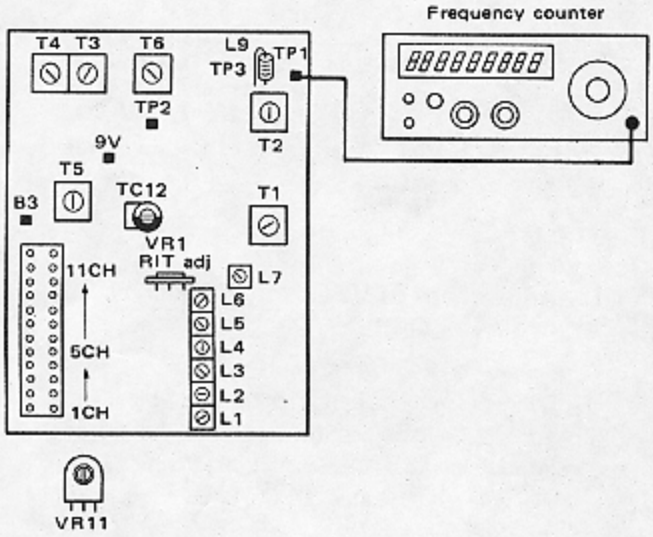

HET Unit (X50-1410-11) K type
(X50-1410-61) W, T type [except L4~L6]

Fig. 22 Adjustment of HET Board

BAND	REPEATER SW	SEND/REC SW	FREQUENCY
144	OFF	REC	125.1000 MHz
145	OFF	REC	126.1000 MHz
146	OFF	REC	127.1000 MHz
147	OFF	REC	128.1000 MHz
146	NOR	REC	127.1000 MHz
		SEND	126.5000 MHz
	REV	REC	126.5000 MHz
		SEND	127.1000 MHz
147	NOR	REC	128.1000 MHz
		SEND	128.7000 MHz
	REV	REC	128.7000 MHz
		SEND	128.1000 MHz

Table 5 (a) HET Unit Oscillation Frequency (K type)

BAND	REPEATER SW	SEND/REC SW	FREQUENCY
144	OFF	REC	125.1000 MHz
145	OFF	REC	126.1000 MHz
145	NOR	REC	126.1000 MHz
		SEND	125.5000 MHz
	REV	REC	125.5000 MHz
		SEND	126.1000 MHz

Table 5 (b) HET Unit Oscillation Frequency (W, T type)

5. Adjustment of HET Board Cont'd (X50-1410-00)

(1) Position knobs as follows:
Band to 146 (K), 144 (W, T)
Fix Ch to 11 (empty)
Drive to Center
(2) Connect RF VTVM to TP-1 of Het unit.
(3) Connect short clip lead from TP-3, (lead of L-9), and any 9V source.
(4) Adjust T-1 and T-2 for maximum, record reading.
(5) Setting band switch from 144 to 147 (K), 144 to 145 (W, T) check level at TP-1. The difference should be less than 0.5 dB, (approx 0.3V rms). If not adjust T-2.

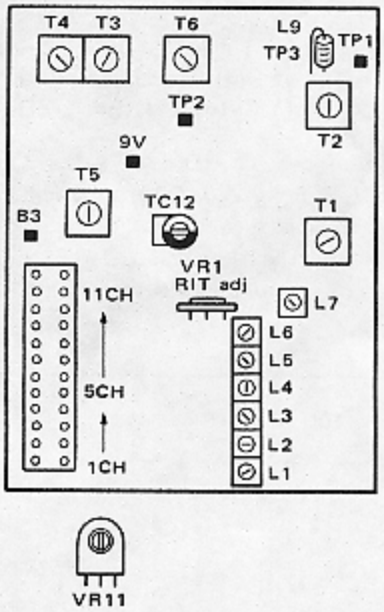

HET Unit (X50-1410-11) K type
(X50-1410-61) W, T type [except L4~L6]

Fig. 23

ADJUSTMENT

(6) Remove clip lead.
(7) Position knobs as follows:
Band to 146 (K), 145 (W, T)
VFO to 800
Fix Ch to VFO
(8) Connect RF VTVM to TP-2
(9) Adjust TC-2 of VFO for 0.3 V RMS
(10) Connect RF VTVM to 133 terminal of Het board.
(11) Adjust T-3, T-4, T-5, T-6 for maximum.
(12) By turning the core of T4 counterclockwise, decrease the VTVM indication by 2dB from that of step (11).
(13) Install a crystal (9.0 MHz) into 1 ch of the FIX. CH Socket and adjust TC2 for the same level as step (12).

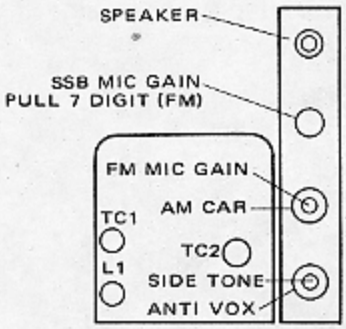

VFO Unit (X40-1080-02)

Fig. 24

6. Adjustment of Counter Unit Frequency (X54-1250-11) K type, (X54-1250-61) W, T type

(1) Connect frequency counter to TP-1.
(2) Adjust TC-5 for 10,240,000 Hz ±10 HZ.
(3) Connect frequency counter to TP-2.
(4) Adjust frequency trimmers TC-1, TC-2, TC-3 and TC-4 for the correct frequencies in each mode as shown in **Table 6.**

MODE SWITCH	TRIMMER	FREQUENCY (MHz)
LSB. CWR	TC1	7.199400 (±10 Hz)
AM. CWT	TC2	7.198450 (±10 Hz)
FM	TC3	7.200000 (±10 Hz)
USB	TC4	7.201500 (±10Hz)

Table 6 Adjustment of Counter Unit Frequency

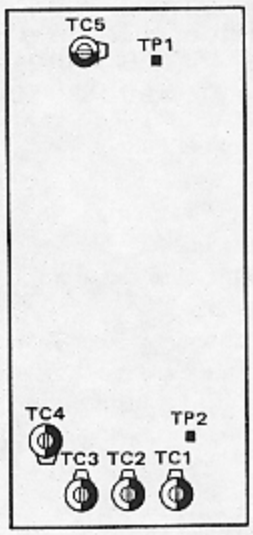

Counter Unit (X55-1250-11) K type
(X55-1250-61) W, T type

Fig. 25 Adjustment of Counter Unit

7. Adjustment of VFO Unit Frequency (X40-1080-02)

• See **Fig. 24**

(1) Connect frequency counter to TP-2 of Het Unit.
(2) Turn VFO dial one turn of small tuning knob from fully clockwise. Adjust the dial attaching screw so that the pointer indicates "1000", the Freq. counter shall read 9,20000 MHZ.
(3) Verify the tracking of VFO per **Table 7.**

Caribration	Adjustment parts	Frequency	Pointer
1000	TC1	9.2000	■ 1000
0	L1	8.2000	■ 0

Table 7

(4) Set knobs as follows:
Band to 146 (K), 145 (W, T)
Mode to FM
Display to normal
(5) Turn VFO knob until the display indicates 145.000 MHz (K), 145.000 MHz. (W, T)
(6) Making sure that 700S is connected to dummy load, set Stand By to "Send", and verify that the Transmit frequency and the display frequency are within ±300 Hz.

ADJUSTMENT

TRANSMITTING SECTION

8. Adjustment of GEN Unit (X52-1080-21)

(1) Position knobs as follows:
VFO Dial to 500
Drive control to Center
Fic CH to ch 11 (empty)
Band to 146 (K), 145 (W, T)
Mode to FM
Stand by to "Send", as necessary.
(2) For connections refer to **Fig. 26.**
(3) Connect RF VTVM to GEN terminal.
(4) Adjust T-3 for maximum, approx 0.2V RMS, and record this value.
(5) Set Mode switch to CW, adjust ALC control, (VR-2 on Mix unit) to minimum ALC.
(6) Adjust T-1 and T-2 for maximum.
(7) Adjust VR-5 (CW Carrier Level) for the same value of RF as recorded in previous step (4)

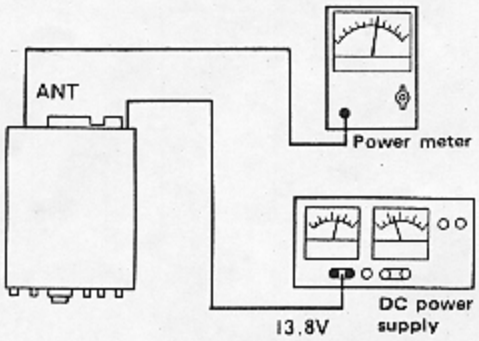

Fig. 26 Adjustment of GEN Unit

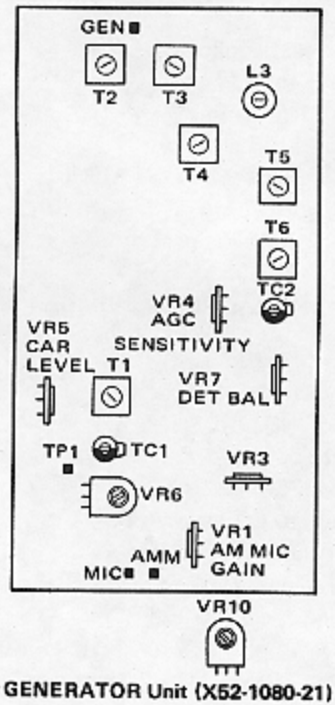

GENERATOR Unit (X52-1080-21)

Fig. 27

9. Adjustment of Mix Unit (X48-1130-00)

Note: This adjustment requires that previous step (**8**) was completed successfully.
(1) Set Fix CH switch to VFO
(2) Adjust T-4 of HET unit and T-1 through T-6, TC-1 of Mix unit alternately for maximum RF power output.
(3) Turn Drive control and check that Max power is obtained at the exact center of knob rotation.
(4) Set Band switch to 146 (K), 145 (W, T)
(5) Only [W, T] Adjust VR-10 (bottom of unit) so that RF meter indicates Max power out. Next, with the REPEATER SW set to "REV", adjust VR12 for max. indication.
(6) Adjust TC-2, TC-3, TC-4 repeatedly for max power out.

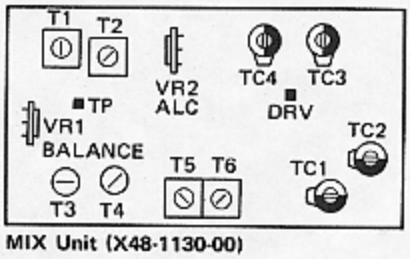

MIX Unit (X48-1130-00)

Fig. 28 Adjustment of MIX Unit

10. Adjustment of Final Unit (X48-1250-00)

Note: This adjustment requires that previous step (**9**) was completed successfully.
(1) Adjust TC-3 and TC-4 of Mix Unit, and TC-1, TC-2, TC-3, and TC-4, of Final Unit repeatedly until maximum RF power output is obtained.
(2) Check to see that RF out is at least 12W on all bands.

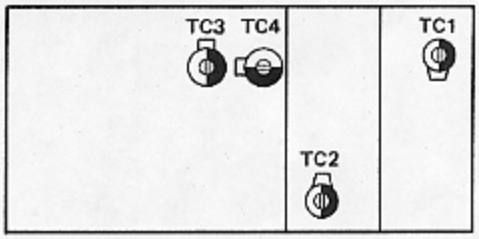

FINAL Unit (X48-1250-00)

Fig. 29 Adjustment of FINAL Unit

11. Adjustment of ALC

(1) Adjust VR-2 of Mix unit to obtain 12W

ADJUSTMENT

12. Check of AM output

(1) Set Mode to AM
(2) Turn AM Carrier control fully Clockwise, and verify that AM output is more than 10W.
(3) Turn AM Carrier control to 3W

13. Adjustment of RF meter, LOW POWER

(1) Set Mode switch to FM
(2) Adjust 700S for maximum Transmitter output
(3) Adjust VR-3 on RX NB (X55-1170-00) for a reading of 8 on the meter.
(4) Press the LOW SW and adjust VR9 (LOW POWER adj.) on the SWITCH unit for 1.5 Watts transmitting output power.

14A. Adjustment of Carrier Suppression

(1) Position knobs as follows:
Mode to USB
Band to 146 (K), 144 (W, T)
Fix CH to VFO
Drive knob to Center
SSB Mic Gain to Maximum

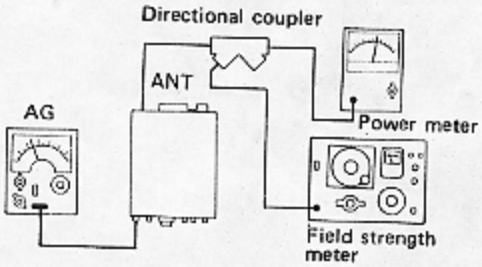

Fig. 30 Adjustment of Carrier Suppression

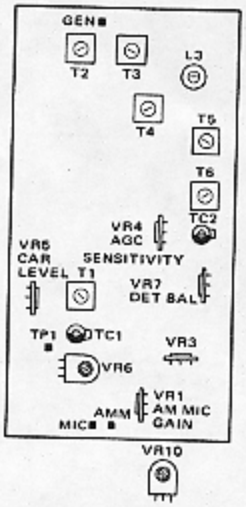

GENERATOR Unit (X52-1080-21)

Fig. 31

(2) For Connections refer to **Fig. 30.**
(3) Apply a audio signal of 2 mv/ 1.5kHz to mic jack.
(4) Adjust test receiver for maximum S meter reading.
(5) Turn SSB Mic gain fully Counterclockwise, Adjust TC-1 and VR-6 Car Bal Adj. of Gen unit for min. Smeter reading.
Note: This carrier suppression reading shall be attenuated more than 40 db than that reading obtained in step 3.
(6) The reading shall remain the same when switching to LSB.

14B. Alternate method of adjusting CAR Suppression

(1) Position knobs the same as in 14A.
(2) For connections refer to **Fig. 32.**
(3) Turn SSB mic gain to minimum
(4) Adjust TC-1 and VR-6 for minimum reading of RF VTVM.
(5) The reading shall be the same for LSB.

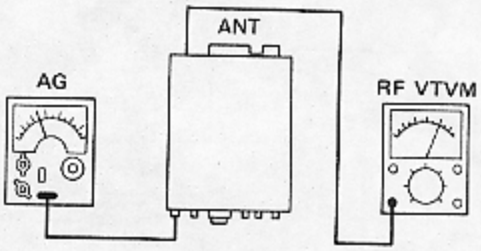

Alternate Method of Adjusting CAR Suppression

Fig. 32

15. Adjustment of AM Modulation

(1) Position knobs as follows:
Mode switch to AM
Fix CH to 11 (empty)
AM Mic gain fully clockwise
(2) Apply audio signal of 2 mV/ 1.5Khz
(3) Connect AF VTVM to AMM terminal of GEN unit
(4) Adjust VR-1 (AM Mic gain) for 250 mV

16A. Adjustment of FM modulation.

(1) Position knobs as follows:
Mode to FM
Band to 146 (K), 145 (W, T)
VFO dial to 500
Fix CH to VFO
FM Mic gain to Center position
(2) For Connections refer to **Fig. 33.**
Set the STAND BY SW to SEND.
(3) Adjust VR-3 for 5KHZ Deviation.
(4) Apply to AG signal of 2mV/1kHz to MIC terminal and adjust FM MIC GAIN potentiometer for 3.5kHz deviation.

ADJUSTMENT

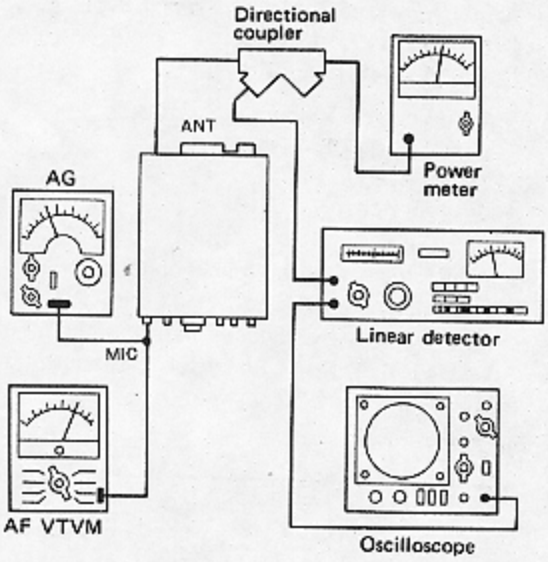

Adjustment of FM Modulation

Fig. 33

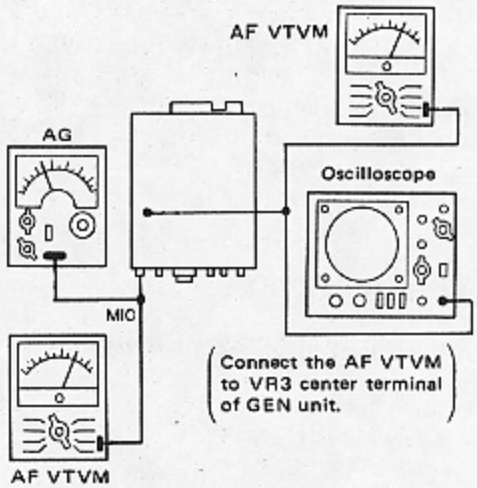

Alternate Method of Adjusting FM Modulation

Fig. 35

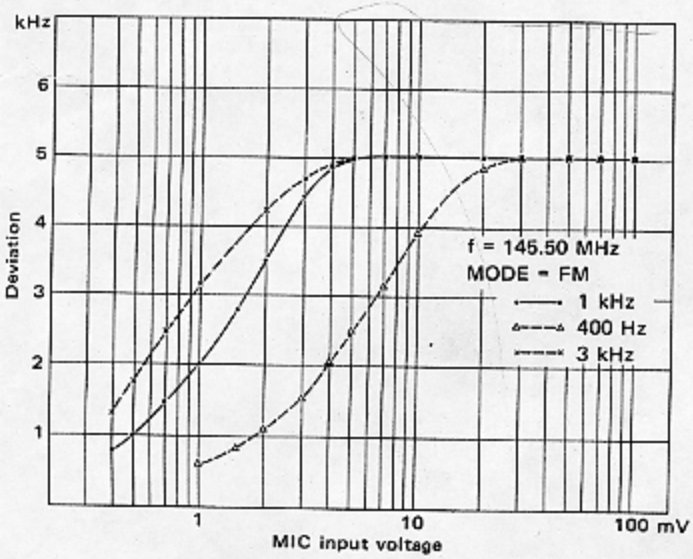

An Example of FM Modulation Characteristics

Fig. 34

16B. Alternate method of adjusting FM modulation

(1) Position knobs same as step 16A.
(2) For connections refer to Fig. 17.
(3) Apply the AG signal of 20mV/1KHz to MIC terminal.
(4) Adjust VR3 of GEN unit for 0.3V AF VTVM reading.
(5) Next apply AG signal of 2mV/1KHz to MIC terminal and adjust the FM MIC GAIN potentiometer for 0.2V AF VTVM reading.

17. Vox operation check

(1) Position knobs as follows:
Vox Gain to Center
Anti Vox to Minimum (Counterclockwise)
Delay to Minimum (Counterclockwise)
AF Gain to Macimum
(2) Set mode to CW, Press key and check that a side tone is generated when transmitting.
(3) Set mode to USB
(4) Apply a 2MV/ 1.5KHZ audio signal to the Mic terminal, check to see that TS-700S is switched to the Transmit Mode.
(5) Check VOX delay by turning Delay clockwise, and removing and re-applying the audio signal.
(6) Set the VOX gain to OFF.

18. Checking the touch tone operation

(**Note:** This adjustment requires that previous step of 16-A was completed.)
(1) Apply the AG signal of 1V/1KHz to TONE PAD terminal.
(2) Verify more than 4kHz deviation.

19. Adjustment of TONE BURST (K,T)

(1) Position knobs as follows:
MODE to FM
Tone SW to ON
(2) Connect the AF VTVM to FIV terminal of FM-IF unit.
(3) Adjust VR2 of FM-IF unit for 200mV AF VTVM reading.

ADJUSTMENT

20. Adjustment of TONE (W type ONLY)

(**Note:** This adjustment requires that previous step of 16-A was completed.)

(1) Turn the TONE SW ON
(2) Adjust VR2 of FM-IF unit for 3kHZ deviation.

RECEIVING SECTION

21. Adjustment of SSB Sensitivity (GEN Unit)

(1) Position knobs as follows:
Band to 146 (K), 144 (W, T)
VFO dial to 500
Drive knob Center
Mode switch to USB
(2) For Connections refer to **Fig. 36.**
(3) Adjust T-4, T-5, and T-6 of GEN unit for maximum reading

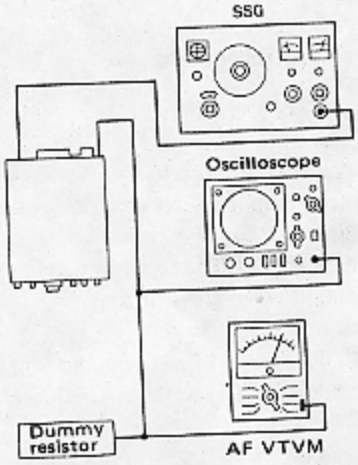

Adjustment of SSB Sensitivity

Fig. 36

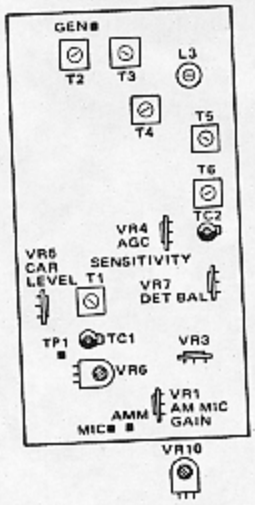

GENERATOR Unit (X52-1080-21)

Fig. 37

22. Adjustment of S Meter Start Level (X55-1170-11) K type (X55-1170-00) W, T type

(1) Position knobs as follows:
Band to 146 (K), 144 (W, T)
UFO Dial to 500
Drive knob to Center
Mode to USB
(2) Turn RF gain control fully counterclockwise verify that S Meter is fully deflected. Turn RF Gain fully clockwise, verify that S meter indicates minimum.
(3) Adjust VR-4 (S Meter Start) for just before the point of beginning to deflect the S-meter with no signal applied.

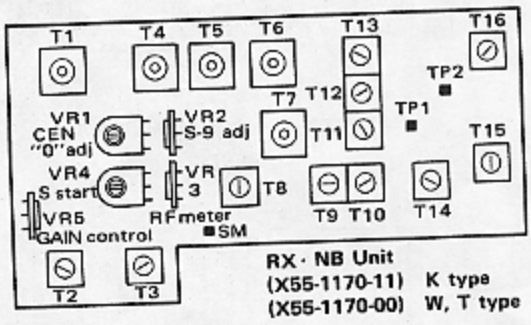

Fig. 38

23. Adjustment of RX NB Unit (X55-1170-11) K type (X55-1170-00) W, T type

Note this adjustment requires that previous step 22 was completed successfully.

(1) Apply an RF signal of 146.50 MHz (K), 144.5 MHz (W, T), 10μV/ 20 dBμ.
(2) Adjust the SSG for an indication of 3 to 5 on rec S Meter
(3) Adjust T-1 and T-4, T-5, T-6, T-7, repeatedly until S meter indicates maximum
(4) Turn the Drive knob from Left to Right and verify that the max deflection is at center.
(5) Adjust T-9 through T-13 for maximum deflection of S Meter.
(6) Set Band Switch to 145 (W, T only)
Re adjust SSG to 145.50.
Adjust VR-11 (upper side of Unit) for max deflection of S Meter.
Next, set the SSG output to 144.9 MHz. With the REPEATER SW set to REV, adjust VR3 as above.
(7) Set VFO dial to 0
(8) Re adjust RS SG to 146.00 MHz (K), 145.00MHz (W, T)
(9) Adjust T-8 for max S Meter Deflection.
(Note) SSG level must be readjusted so as not to over load the receiver.

ADJUSTMENT

24. Adjustment of NB circuit

(1) Position knobs as follows:
Band to 145 NB Switch to ON
VFO Dial to 500
Drive knob to Center
(2) Connect a DC Voltmeter to the TP-2 terminal of the RX NB
(3) Increase the SSG output until the voltmeter indication begins to decrease. (SSG approx. 20 dBμ)
(4) Adjust T-14, T-15, T-16, for minimum voltmeter reading.
(5) Connect an noise generator to the ANT terminal and check to see that the noise content is reduced when the NB is switched to ON.

25. Adjustment of the MCF

Note: This adjustment must be made after Step 24.
(1) Set Mode to FM
(2) Set RF SSG to 3 μV (10 dBμ), un-modulated. Adjust the VFO dial for maximum S Meter.
(3) Modulate the SSG with 1KHZ, DEV 5KHZ.
(4) Adjust T-9 and T-10 of the RX NB for maximum S Meter deflection.

26. Adjustment of Discriminator Circuit

(1) Position knob Mode to FM
(2) Set SSG output to 1 μv, 1Khz, Dev 5KHz.
(3) Adjust T-3 and T-4 of the FM IF unit for max reading of the AF VTVM and optimum waveform.

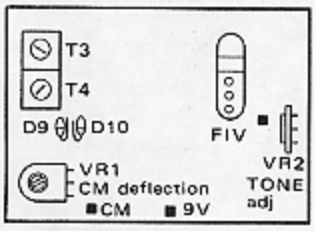

FM · IF Unit
(X48-1140-20) K type
(X48-1140-61) W type
(X48-1140-51) T type

Fig. 39

27. Adjustment of S Meter

Note: This adjustment must be made after step 27.
(1) Set SSG level to 1 μV (0 dBμ) unmodulated, adjust VFO for maximum deflection of S Meter.
(2) Adjust VR-4 AGC SEN of GEN Unit for a reading of 1 on S Meter.
(3) Increase SSG to 10 μV (20 dBμ). Adjust VR-2 (S 9 adjust) for a reading of 9 on S/Meter.
(4) Re Check previous steps. Refer to Fig 29 for S Meter deflection.

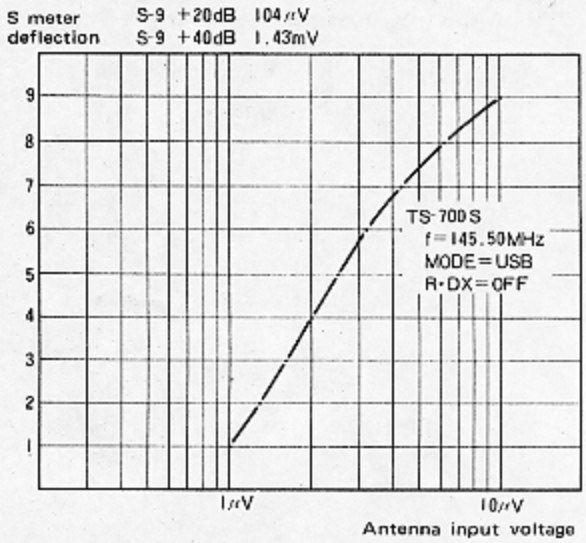

An Example of S Meter Deflection

Fig. 40

28. Adjustment of the Center Meter

(1) Position knobs as follows:
Mode to FM
S Meter SW to CM
(2) Disconnect the RF SSG from the ANT terminal.
(3) Short the CM terminal of FM IF Unit to ground with short clip lead.
(4) Adjust VR-1 (Cen adj) of RF NB to set the Meter to "5" on the RF scale.
(5) Remove the clip lead.
(6) Short the Cathode of D15 and D16 of FM IF with short clip lead.
(7) Adjust T-4 of FM IF to set the Meter to "5" on the RF scale.
(8) Adjust T-3 of FM IF for Maximum AF output.
(9) Set the SSG output to 10 μv (20 dBμ), un-modulated. Turn the VFO to deflect the meter to the "+" side, adjust VR-1 of FM IF to set the meter to "8" on the RF scale.
(10) Turn the VFO in the opposite direction to the "–" side and verify that the meter reading is within the range of 2 ±1 on the RF scale.

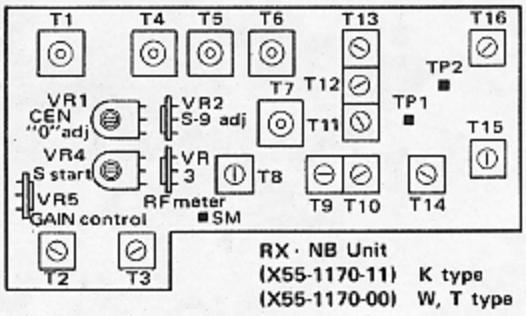

RX · NB Unit
(X55-1170-11) K type
(X55-1170-00) W, T type

Fig. 41

ADJUSTMENT

29. Adjustment of the Receiver Pre-Amp

(1) Position the knobs as follows:
Mode to USB
Band to 146 (K), 145 (W, T)
VFO dial to 0
R. DX Switch to "on"

(2) Set the SSG to 0.3 μV (−10 dBμ), unmodulated, Freq. 146 (K), 145 (W, T)

(3) Adjust T-2 and T-3 of the RXNB for maximum Reading of the AF VTVM.

(4) Set the R DX SW to off and adjust AF VTVM for 0.63 V/8 ohms.

(5) Set the R DX sw to on and adjust VR-5 (gain adj) until AF VTVM reads 0.63V/8 ohms + 3 dB.

Check of operating condition

(1) Position knobs as follows:
Band to 146 (K), 145 (W, T)
VFO to O

(2) Set the SSG to 0.25 μV (−12 dBμ), unmodulated freq 146.00 (K), 145.00 (W, T)

(3) Receive the signal at maximum and measure the S/N ratio.

(4) Set the R DX to On and verify that the S/N is improved more than 0.5 dB.

(5) Refer to **Fig. 42** for specifications.

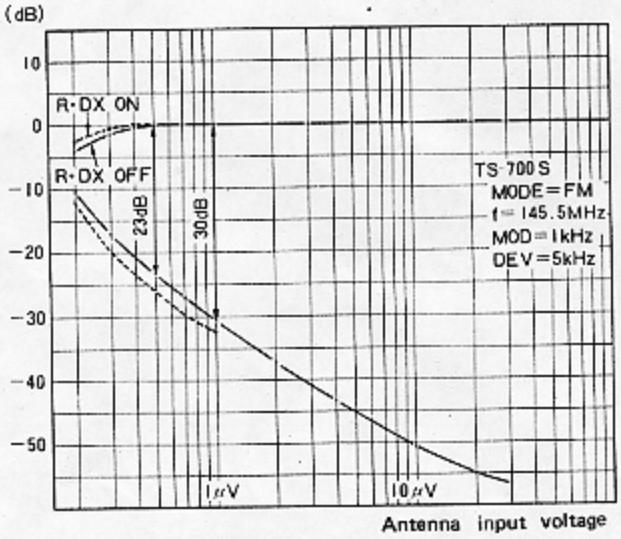

An Example of Antenna Input Voltage VS Output Level S/N

Fig. 42

30. Check of the BPF Characteristic

(1) Refer to Fig. 21 for connections

(2) Refer to Fig. 32

(3) Set the SSG to 80 dBμ and measure the pass-band characteristic. Insertion loss should be within −0.7 dB in the range to 144.0 ~ 148.0 MHz (K), 144.0 to 146.0 MHz (W, T).

(4) Verify that attenuation is more than 11 dB at 146.00 ±10 MHz (K), 13 dB at 145.000 ±10 MHz (W, T).

Note: Adjustments of the BPF requires special instruments. Do not turn factory sealed adjustments.

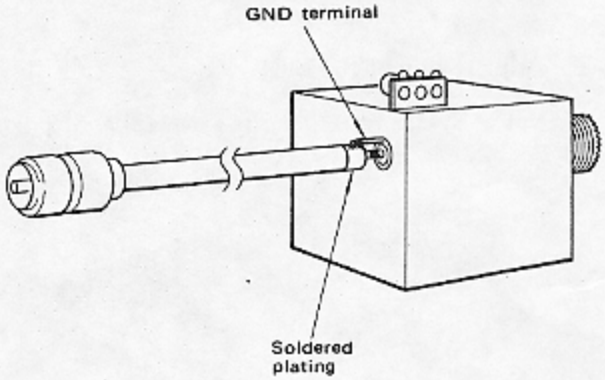

Fig. 43 Connection of Coaxial Cable

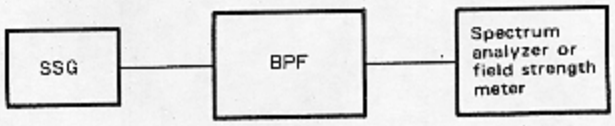

Note: Use M-type connector.

Fig. 44 Check of the BPF Characteristic

VFO-700S

General

This is an external VFO exclusively designed for use with TS-700S. It generates oscillation frequencies of 8.2 to 9.2MHz and provides the same performance as the built-in VFO of TS-700S.

Frequencies are indicated on the dial scale by analog system and 7-figures, fluorescent tube, digital system. RIT circuit and "f" check circuit are also included as auxiliary circuits. RIT adjustable range is more than ±2kHz and its frequency shift is indicated by the fluorescent tubes, which is not possible with TS-700S. The "f" check circuit is used to switch the displayed frequency from operating frequency to nonoperating VFO.

SPECIFICATIONS

Oscillation Frequency	8.20 to 9.20 MHz
Oscillation Circuit	VFO: Clapp Oscillator
Output Voltage	0.9 Volt ±2 dB (across a 470 ohm load)
Frequency Stability	Within ±2 kHz during one hour after one minute of warm-up, and within 150 Hz during any 30 minute period thereafter.
Solid State Complement	2 transistors, 2 FET's, 6 diodes
Power Requirements	The VFO-700S receivers power from the TS-700S. 14 VDC, 50 mA, 12 VDC, 100 mA, 9.0 VDC, 25mA
Dimensions	6-5/16" (160) wide x 4-3/4" (123) high x 7-7/8" (200) deep (mm) (excluding feet)
Weight	2.4 kg (5.3 lbs.)

ADJUSTMENT

(1) Check tracking and adjust as necessary per step 7 page 55.
(2) Connect RF VTVM to TP-2 of Het unit and adjust TC-2 of external VFO for 0.3 V RMS.
(3) Connect frequency counter to TP-2 of Het unit.
(4) Set External VFO to 8.20000 MHz.
(5) Set External VFO RIT to "on".
(6) Verify that RIT control will adjust the freq. ±2 kHz.

PACKING

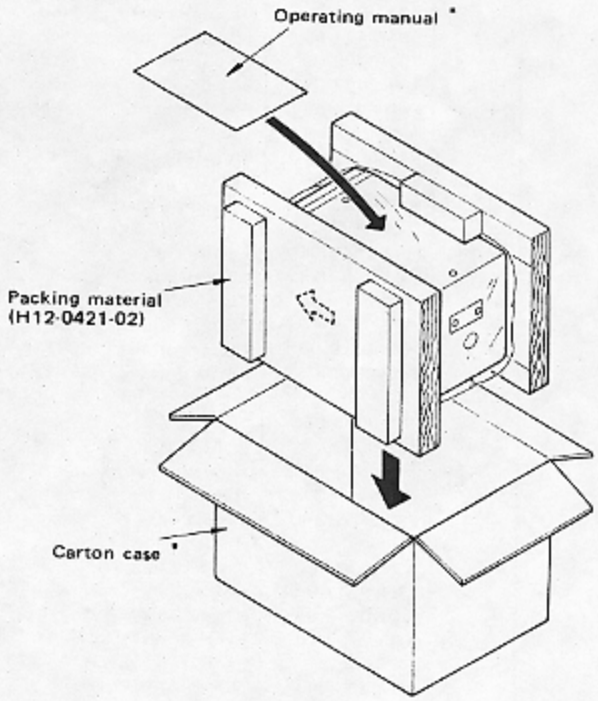

* Refer to PARTS LIST.

VFO-700S/PARTS LIST

TOTAL

29.

(1)

(2)

(3)

(4)

(5)

Ch

(1)

(2)

(3)

(4)

(5)

(dB

IC

C

-11

-20

-30

-40

-50

Ref. No.	Parts No.	Description	Remarks
		CAPACITOR	
C1~3	CK45F1H103Z	Ceramic 0.01μF +80%,−20%	
		RESISTOR	
R1	RD14BY2B102J	Carbon 1kΩ ±5% 1/8W	
R2	RD14BY2B122	Carbon 1.2kΩ ±5% 1/8W	
		SEMICONDUCTOR	
D1, 2	V11-0430-05	LED SEL-103W	
		POTENTIOMETER	
VR1	R03-2006-05	Variable resistor 5kΩ (B) RIT	
–	S36-2026-15	Lever switch RIT	
–	S36-2029-05	Lever switch FREQ CHECK	
		MISCELLANEOUS	
–	A01-0705-03	Case (A) Up	
–	A01-0760-13	Case (B) Down	
–	A21-0715-03	Ornament panel	☆
–	B01-0603-13	Panel escutcheon x2	
–	B07-0606-05	Dial escutcheon ass'y	☆
–	B07-0607-05	Switch grill	☆
–	B20-0804-04	Dial plate	
–	B30-0804-05	Pilot lamp x2 12V 40mA	
–	B40-2424-04	Model name plate	
–	B42-1628-04	Name plate K, W	☆
–	B42-1627-04	Name plate T	☆
–	B46-0059-00	Warranty card K	☆
–	B50-2557-00	Operating manual K, W	☆
–	B50-2558-00	Operating manual T	☆
–	D40-0601-05	Dial mechanism	
J5	E01-0903-05	9P MT socket	
J5	E05-0901-05	9P MT plug x2 connecting cable	
J6	E09-0204-05	2P plug	
J7	E14-0101-05	1P phono plug	
	E23-0069-05	Terminal x2 for earth cable	
J3	E31-0420-05	5P connector with lead	☆
J4	E31-0421-05	3P connector with lead	☆
J1	E31-0422-05	6P connector with lead	☆
J2	E31-0423-05	9P connector with lead	☆
J4	E40-0314-05	Pin connector 5049-3A	
–	F15-0609-04	Shield rubber x2 for LED	
–	F15-0613-04	Switch mask	☆
–	F20-0506-04	Insulating plate x2	
–	H01-2546-04	Carton case K, W	☆
–	H01-2547-04	Carton case T	☆
–	H12-0421-02	Cushion (A) x2	☆
–	H20-0274-13	Protection cover	☆
–	H25-0029-04	Protection bag 60x110 (mm)	
–	H25-0103-04	Protection bag 125x250 (mm)	
–	J01-0025-04	Sub-foot	
–	J02-0049-14	Foot x4	
–	J19-1301-04	Diode holder x2	
–	J32-0109-04	Hex. boss control unit	
–	J32-1030-14	Round boss x2	
–	K21-0279-04	Knob (C) x2 RIT. FUNCTION	
–	K21-0711-04	Knob (Large) main	
–	K21-0712-04	Knob (Small) main	
–	K23-0707-04	Lever knob (B) x2	
–	N10-3060-41	Nut (M6) for GND	
–	N14-0020-04	Butterfly nut (M6) for GND	

Ref. No.	Parts No.	Description
–	N16-0060-41	Spring washer for GND
–	N19-0089-00	Washer for GND
–	N30-2604-46	Round head screw x5 dial escutcheon etc.
–	NN30-3006-46	Round head screw x3 Lamp, control unit
–	N30-4010-41	Round head screw x3
–	N30-6018-41	Round head screw
–	N32-3006-46	Flat head screw x10
–	N35-3004-45	Binder screw x2 case
–	N35-3004-46	Binder screw x2 dial plate
–	N35-3006-45	Binder screw x12 case
–	N87-3006-41	Tap tight screw x4
–	X40-1080-03	VFO unit
–	X53-1070-00	Control unit

VFO UNIT (X40-1080-03)

Ref. No.	Parts No.	Description
		CAPACITOR
C1	CC45CH1H180J	Ceramic 18pF ±5%
C2	CC45CH1H220J	Ceramic 22pF ±5%
C3	CC45PG1H470J	Ceramic 47pF ±5%
C4	CC45PG1H220J	Ceramic 22pF ±5%
C5	CC45LG1H220J	Ceramic 22pF ±5%
C6, 7	CM93F2A101J	Super mica 100pF ±5%
C8	CC45CH1H030D	Ceramic 3pF ±0.5pF
C9	CK45E1H223P	Ceramic 0.022μF +100%, −0%
C10,11	CK45F1H473Z	Ceramic 0.047μF ±5%
C12	CC45CH1H180J	Ceramic 18pF ±5%
C13	CK45F1H473Z	Ceramic 0.047μF +80%, −20%
C14	CC45CH1H180J	Ceramic 18pF ±5%
C15	CC45CH1H220J	Ceramic 22pF ±5%
C16	CK45F1H103P	Ceramic 0.01μF +100%, −0%
C17	CK45F1H473Z	Ceramic 0.047μF +80%, −20%
C18	CC45SL1H470J	Ceramic 47pF ±5%
C19	CC45SL1H101J	Ceramic 100pF ±5%
C20	CC45SL1H470J	Ceramic 47pF ±5%
C21	CC45CH1H070D	Ceramic 7pF ±0.5pF
C22	CK45D1H102M	Ceramic 1000pF ±20%
		RESISTOR
R1~11	RD14BY2B000J	Carbon 000Ω ±5% 1/8W
		SEMICONDUCTOR
Q1, 2	V09-0020-05	FET 3SK22(Y)
Q3, 4	V03-0079-05	Transistor 2SC460(B)
D1, 2	V11-0051-05	Diode 1N60
D3	V11-0291-05	Vari-cap diode 1S1658-1
VC1	C01-0177-05	Variable capacitor
		VC/TRIMMER
TC1	C03-0001-05	Midget variable capacitor
TC2	C05-0013-15	Ceramic trimmer

VFO-700S/PARTS LIST

Ref. No.	Parts No.	Description	Re-marks
		COIL/INDUCTOR	
L1	L32-0166-05	OSC coil	
L2, 3	L40-1021-03	Ferri-inductor 1mH	
L4	L40-2201-03	Ferri-inductor 22μH	
L5, 6	L40-1021-03	Ferri-inductor 1mH	
L7, 8	L40-4791-02	Ferri-inductor 4.7μH	
L9	L40-1021-03	Ferri-inductor 1mH	
		MISCELLANEOUS	
–	D22-0011-05	Shaft coupling	
–	D40-0601-05	Dial mechanism	☆
–	E08-0204-05	2P connector jack	
–	E13-0101-05	1P phono jack	
–	E22-0207-05	Lug terminal	
–	E23-0046-04	Lapping terminal x 5	
–	G03-0009-04	Spring	
–	N10-2040-11	Nut 4φ	
–	N15-1040-11	Washer x 2 4φ	
–	N16-0030-41	Spring washer x 4 3φ	
–	N17-1030-31	Washer with teeth x 8 3φ	
–	N17-1040-41	Washer with teeth x 8 4φ	
–	N30-2006-11	Round head screw x 3	
–	N30-3004-11	Round head screw x 3	
–	N30-3006-11	Round head screw x 17	
–	N30-4014-11	Round head screw	
–	N32-3006-11	Flat head screw x 4	
–	N32-3008-11	Flat head screw x 4	
–	N87-3006-46	Tapping screw	

CONTROL UNIT (X53-1070-00)

Ref. No.	Parts No.	Description	Re-marks
R1	RD14BY2B332J	Carbon 3.3kΩ ±5% 1/8W	
R2	RD14BY2B222J	Carbon 2.2kΩ ±5% 1/8W	
R3	RD14BY2B102J	Carbon 1kΩ ±5% 1/8W	
D1	V11-0076-05	Diode 1S1555	
VR1	R12-3022-05	Semi-fixed resistor 10kΩ(B)	
S1	S29-4401-05	Slide rotary switch	☆
RL	S51-2405-05	Relay	☆

Ref. No.	Parts No.	Description	Re-marks

VFO-700S/SCHEMATIC DIAGRAM

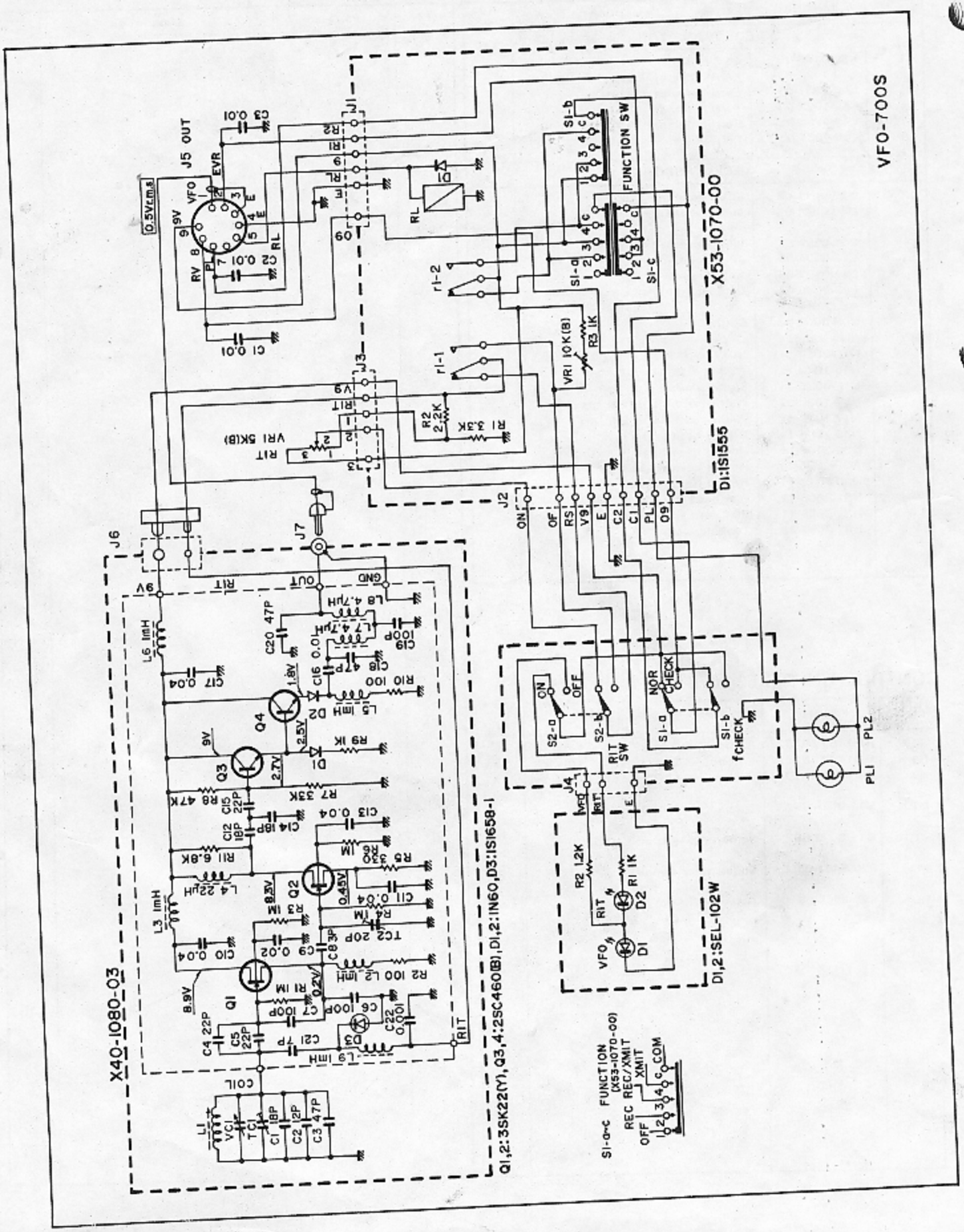

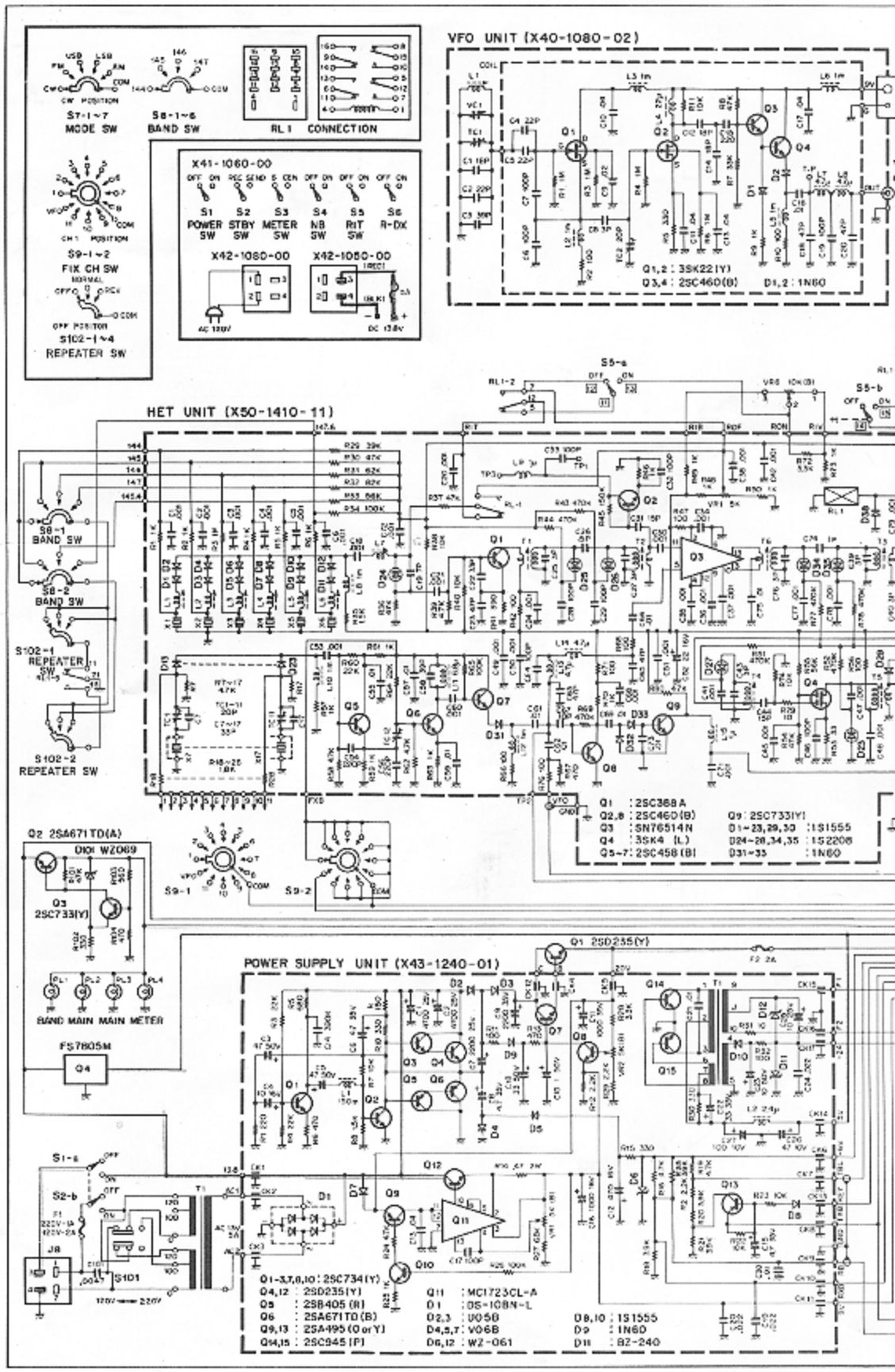

923D

WA723C
RC723D

TS-700S SCH

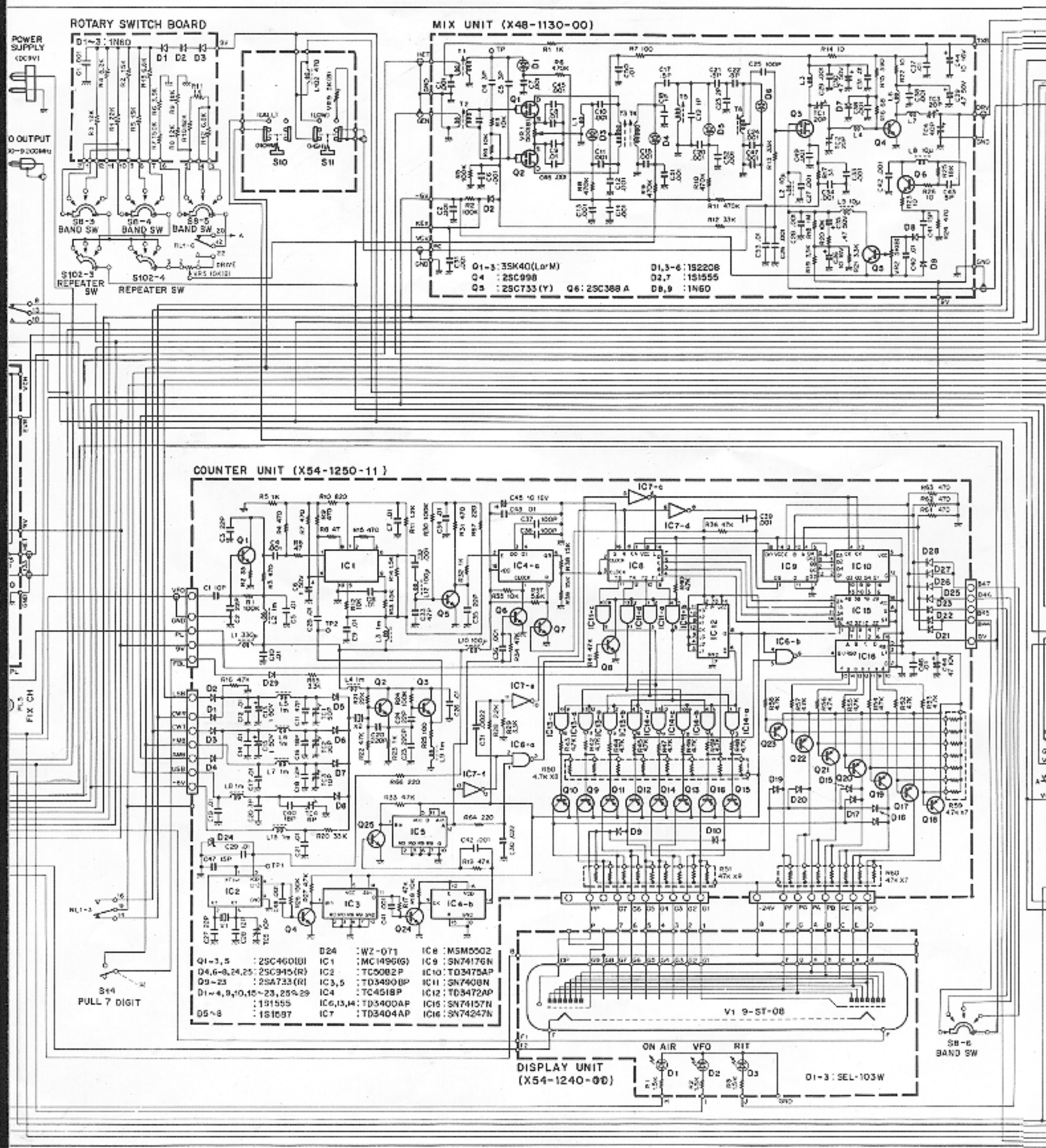
ROTARY SWITCH BOARD
MIX UNIT (X48-1130-00)
COUNTER UNIT (X54-1250-11)
DISPLAY UNIT (X54-1240-00)
POWER SUPPLY
BAND SW
REPEATER SW
PULL 7 DIGIT
FIX CH
ON AIR
VFO
RIT
V1 9-ST-08
SB-6 BAND SW

EMATIC DIAGRAM

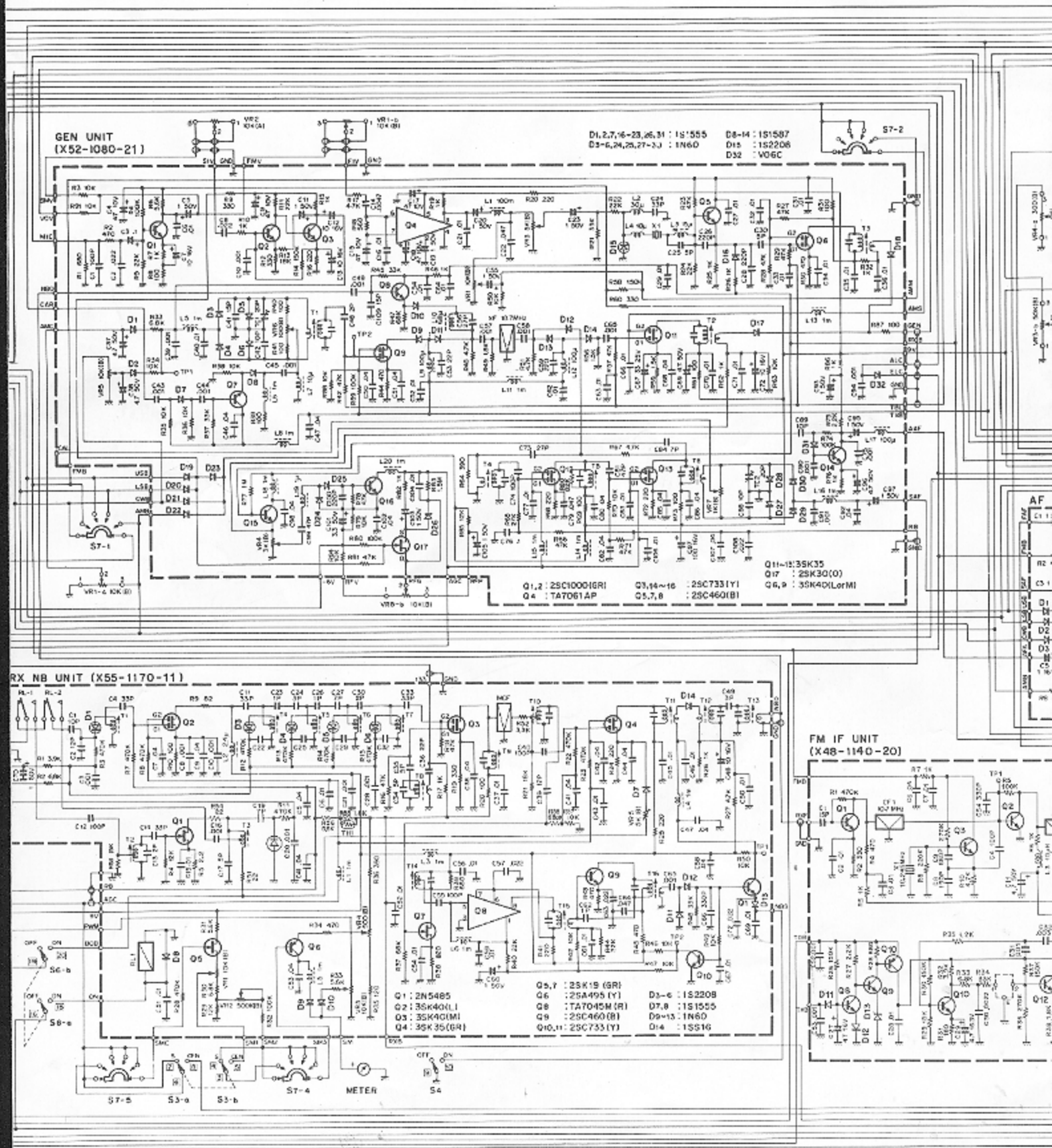

Measure

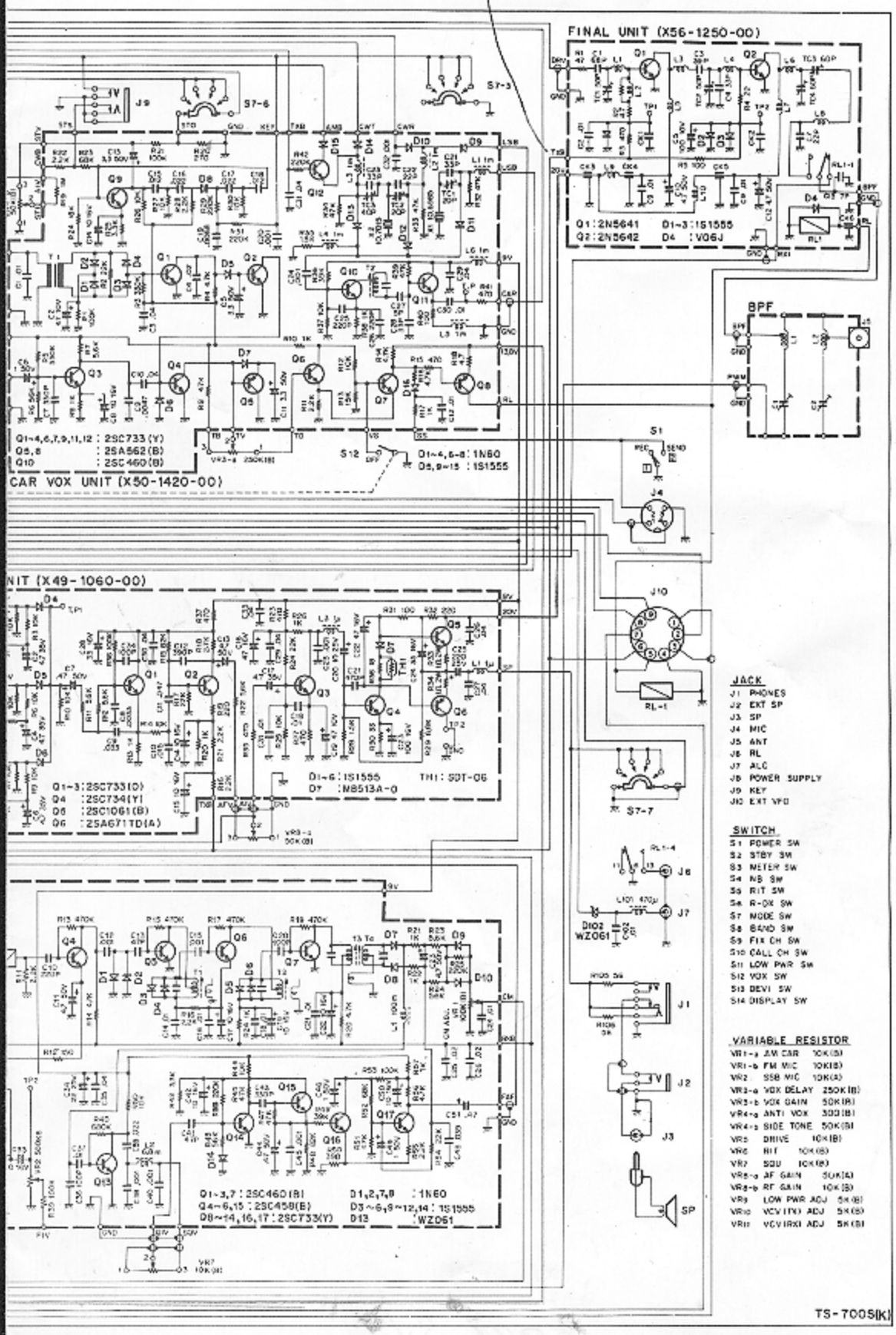

TS-700S(K)